TRIPARTITE ENERGY SERVICES AGREEMENT

BETWEEN

SMART TELECOM LIMITED
(END USER)

AND

ZOODLABS (SL) LIMITED
(CUSTOMER)

CROSSBOUNDARY ENERGY (SL) LIMITED
(ENERGY SERVICES PARTNER)

TABLE OF CONTENTS

Page

1 DEFINITIONS AND INTERPRETATIONS 2
2 ENGAGEMENT 14
3 TECHNICAL SITE SURVEY 15
4 EARLY PROCUREMENT OF ESP ENERGY EQUIPMENT 17
5 IMPLEMENTATION 17
6 NUMBER OF MANAGED SITES 19
7 RELOCATION OF MANAGED SITES 20
8 VARIATIONS 20
9 COMMENCEMENT AND DURATION 21
10 PURCHASE OF EXISTING ASSETS 21
11 CONSIDERATION, INVOICING AND PAYMENT TERMS 21
12 REPRESENTATIONS AND WARRANTIES 23
13 OBLIGATIONS OF THE ENERGY SERVICES PARTNER 24
14 OBLIGATIONS OF THE CUSTOMER 27
15 OBLIGATIONS OF END USER 28
16 BENEFICIARIES 29
17 RELATIONSHIP OF THE PARTIES 29
18 SERVICE LEVEL AGREEMENT AND ESCALATION OF MAINTENANCE SERVICES 30
19 INSURANCE 30
20 PAYMENT OF TAXES 30
21 EMPLOYEES AND LABOUR 30
22 ANTI-BRIBERY & ANTI-CORRUPTION 31
23 TRADE LAWS, ANTI-TERRORISM AND ANTI-MONEY LAUNDERING 31
24 ESG REQUIREMENTS 32
25 ASSIGNMENT AND SUBCONTRACTING 33
26 FORCE MAJEURE 34
27 DISPUTE RESOLUTION 36
28 GOVERNING LAW 37
29 APPLICABLE LAW & APPROVALS 37
30 FUEL ADMINISTRATION 37
31 CONFIDENTIALITY 38
32 INDEMNIFICATION 38
33 WITHDRAWAL OF SITES AND TERMINATION 39
34 LENDER STEP-IN RIGHTS 43
35 CHANGE IN LAW 43
36 OPTION OF TRANSFER OF ESP ENERGY EQUIPMENT AFTER EXPIRATION 43
37 LIMITATION OF LIABILITY 44

38 NOTICES 44
39 ENTIRE AGREEMENT AND AMENDMENT 45
40 SEVERABILITY.....45
41 NON-WAIVER.....45
42 COUNTERPARTS 45
SCHEDULE 1A SCOPE OF WORK AND ENERGY SERVICES 48
SCHEDULE 1B SCOPE OF MAINTENANCE WORK AND SERVICES 54
SCHEDULE 2 ESP ENERGY EQUIPMENT DESIGN.....61
SCHEDULE 3 PRICING AND PAYMENT TERMS.....68
SCHEDULE 4 SLA AND PENALTIES 72
SCHEDULE 5 LIST OF COMMITTED SITES.....76
SCHEDULE 6 SITE ACCESS PROCEDURE.....78
SCHEDULE 7 HEALTH, SAFETY, ENVIRONMENTAL AND LAND ACQUISITION REQUIREMENTS 79
SCHEDULE 8 REQUIREMENTS FOR TECHNICAL SITE SURVEY OF COMMITTED SITES 87
SCHEDULE 9 IMPLEMENTATION SCOPE.....92
SCHEDULE 10 SCHEDULED PHASE COMPLETION DATE AND DELAY DAMAGES.....100
SCHEDULE 11 LIST OF APPROVED SUBCONTRACTORS 102
SCHEDULE 12 APPROVALS.....103
SCHEDULE 13 EXIT AMOUNT 104

THIS ENERGY SERVICES AGREEMENT IS MADE THIS 27th DAY OF SEPTEMBER 2024 (the "**Signature Date**")

BETWEEN

SMART TELCOM LIMITED, a limited liability company incorporated under the laws of Sierra Leone and having its registered office at C/o 35 Jones Street, Top Floor, Freetown, Sierra Leone (hereinafter referred to as "**End User**", which expression shall where the context so admits include its Affiliates, successors-in-title, and assigns);

AND

ZOODLABS (SL) LIMITED, a limited liability company incorporated under the laws of Sierra Leone and having its registered office at No. 37A Wilkinson Road, Freetown, Sierra Leone (hereinafter referred to as "**Customer**", which expression shall where the context so admits include its Affiliates, successors-in-title, and assigns);

AND

CROSSBOUNDARY ENERGY (SL) LIMITED, a limited liability company incorporated under the laws of Sierra Leone and having its address at c/o Basma & Macaulay of No 26 Main Motor Road, Brookfield's, Freetown, Sierra Leone (hereinafter referred to as the "**Energy Services Partner**" or "**ESP**", which expression shall where the context so admits, include its Affiliates, successors-in-title, and assigns).

In this Agreement, the **End User, Customer** and the **Energy Services Partner** are individually referred to as a "**Party**" and collectively as the "**Parties**".

WHEREAS:

(a) The End User is an affiliate company of the Customer and the licensee for 5G operations in Sierra Leone issued by the National Telecommunication Authority.

(b) The End User, the Customer and other third parties are the entities occupying the Site and the intended user of the Services to be provided by the Energy Services Partner.

(c) The Energy Services Partner engages in the business of providing telecommunication site energy services, maintenance services and other related services.

(d) The Customer is a comprehensive technology and smart utility infrastructure company that provides high-speed internet services through a wireless broadband network in Freetown, Sierra Leone.

(e) The End User and the Customer wishes to engage the Energy Services Partner to provide energy services and maintenance services on some of its telecommunications sites (which is anticipated to be around 72 sites) (each a "**Site**") as more particularly detailed in this Agreement, as well as other ancillary services at some Sites in accordance with the terms and conditions of this Agreement (hereinafter referred to as the "**Services**") in Sierra Leone.

(f) The Energy Services Partner has represented to the End User and the Customer that it has the requisite skills, knowledge, manpower and capacity to provide the Services in a diligent, efficient, and professional manner in accordance with all the terms and conditions of this Agreement.

(g) Relying on the Energy Services Partner's representations, the End User and the Customer now desire to engage the Energy Services Partner to provide the Services.

(h) The Parties now wish to have their understanding reduced to writing in the manner hereinafter appearing, which shall be binding on both Parties.

NOW THEREFORE, subject to the terms and conditions hereinafter set forth, and in consideration of the mutual covenants contained herein, the Parties agree as follows:

1 DEFINITIONS AND INTERPRETATIONS

1.1 Definitions

In this Agreement (including the recitals above and Schedules attached hereto),, the words and expressions defined below shall have the meanings assigned to them respectively, except where the context requires otherwise:

"AC" means alternating current.

"**Acceptance**" has the meaning given to it in Clause 5.2.1 (Acceptance of the Implementation).

"**Acceptance Date**" means, for a Committed Site, the date of issuance or deemed issuance of the Acceptance Certificate for such Committed Site.

"**Acceptance Certificate**" means an acceptance certificate issued under Clause 5.2.2 (Acceptance of the Implementation).

"**Acceptance Tests**" means the tests described in Schedule 9 (Implementation Scope).

"**Active Equipment**" means the Passive Infrastructure installed on the Site and network equipment.

"**Additional Site**" means any new Site not previously included in Schedule 5 (List of Committed Sites) that may be proposed by the Customer or the Energy Services Partner to be governed by this Agreement, and which many only become a Managed Site in accordance with the procedures set out in this Agreement.

"**Affected Services**" has the meaning given to it in Clause 26.3 (Withdrawal of Sites for Force Majeure).

"**Affected Site**" has the meaning given to it in Clause 26.3 (Withdrawal of Sites for Force Majeure).

"**Affiliate**" of a Party shall mean with respect to such Party, an entity that directly or indirectly, through one or more intermediaries, Controls, is Controlled by, or is under common Control with, such Party.

"**Agreement**" means this energy services agreement, its schedules and appendices, and includes any amendments and/or supplements thereto made in accordance with the provisions hereof.

"**Allocation Target**" means in relation to Fuel, the agreed quantity or volume of Fuel, sufficient to power a Site on a periodic basis.

"**Anti-Corruption Laws**" means:

(a) the OECD Convention on Combating Bribery of Foreign Public Officials in International Business Transactions dated 21 November 1997 (the "**OECD Convention**");

(b) the Foreign Corrupt Practices Act of 1977 of the United States of America, as amended by the Foreign Corrupt Practices Act Amendments of 1988 and 1998, and as may be further amended and supplemented from time to time (the "**FCPA**");

(c) the UK Bribery Act 2010;

(d) The Anti-Corruption Act 2008 (as amended) of Sierra Leone; and

(e) any other applicable law governing the Parties (including any (a) statute, ordinance, rule or regulation; (b) order of any court, tribunal or any other judicial body; and (c) rule, regulation, guideline or order of any public body, or any other administrative requirement) which:

(i) prohibits the conferring of any gift, payment or other benefit on any person or any officer, employee, agent or adviser of such person; and/or

(ii) is broadly equivalent to, or was intended to enact, the provisions of the OECD Convention or which has as its objective the prevention of corruption.

"**Applicable Law**" means any statute, law, regulation, ordinance, rule, judgment, rule of common law, clearance, order, decree, bye-law, directive, guideline, policy, requirement or other governmental restrictions or any similar form of decision or determination by, or any interpretation or administrative order having the force of law of any of the foregoing by any Government Authority having jurisdiction over the matter in question.

"**Approvals**" means any licence, exemption, permit, consent, approval, authorization, determination, certificate, or notice required to be obtained under Applicable Law from any Government Authority in connection with the use of the Sites, the provision of the Services or the performance by any Party of its obligations under this Agreement, including any condition or requirement imposed under any of the foregoing.

"**Business Day(s)**" means any day of the week from Monday to Friday, except Saturdays, Sundays, bank holidays or public holidays declared by the Government in Sierra-Leone.

"**CAPEX**" means capital expenditure.

"**Claims**" means any claims, demands, actions, suits, proceedings, disbursement, judgements, damages, penalties, fines, losses, Liabilities, costs, and expenses, including reasonable attorney fees and expenses and amounts paid in settlement.

"Change in Law" means the occurrence of any of the following events after the Effective Date:

(a) the introduction, adoption, enactment or promulgation of any new applicable law by any government authority or any change in the interpretation or application of any Applicable Law, save for any of the aforementioned resulting in an increase in corporate income taxes of general application which does not discriminate against the Energy Services Partner or against the Energy Services Partner and other parties undertaking services similar to the Services; and/or

(b) the change or repeal of any Applicable Law, save for any of the aforementioned, resulting in an increase in corporate income taxes of general application which does not discriminate against the Energy Services Partner or against the Energy Services Partner and other parties undertaking services similar to the Services; and/or

(c) the introduction, adoption, or change of any authorisation or any material condition in connection with the issuance, renewal or modification of any authorisation or Customer or End User's Policies; and/or

(d) any change to the terms and conditions or to the interpretation or application of any authorisation or addition of new terms and conditions after granting said authorisation; and/or

(e) the revocation, repeal or cessation of effectiveness of any authorisation prior to the expiration date of such authorisation, provided that the relevant Party is in compliance with the material requirements and conditions established therein or if any authorisation was granted for a limited period its non-renewal (or its renewal in terms or subject to conditions less favourable to the relevant Party), provided that such Party has observed all the requirements applicable to the grant of that renewal; and

(f) the occurrence of the event:

(i) renders it unlawful to give effect to this Agreement; or

(ii) has a material adverse financial impact on the Services or materially and adversely affects the commercial intent or overall balance of liability and risk agreed to by the Parties in this Agreement; and

(iii) is an event in respect of which the Energy Services Partner is not entitled to any other relief pursuant to any other provisions of this Agreement; and

(iv) was not reasonably foreseen by the Energy Services Partner on or before the Effective Date or if it was foreseen, the impact on the Services was not reasonably foreseen.

"**Change of Control**" means in respect of either Party, the sale of all or substantially all the assets of that Party; any merger, consolidation, or acquisition of that Party with, by or into another corporation, entity, or person; a change in the majority of the board of directors of that Party or any change in the ownership of more than **fifty-one percent (51%)** of the voting capital stock of that Party in one or more related transactions.

"**Coercive Practice**" means the impairing or harming, or threatening to impair or harm, directly or indirectly, any party or the property of the party with a view to influence improperly the actions of a party.

"**Collusive Practice**" means an arrangement between two or more parties designed to achieve an improper purpose, including to influence improperly the actions of another party.

"**Committed Sites**" means:

(a) the Sites listed in Part A (Committed Sites for the first Proposed 1se) of Schedule 5 (List of Committed Sites); and

(b) otherwise during the Term of this Agreement, the Sites proposed by the Energy Services Partner to be included in a new Proposed Phase.

"**Confidential Information**" includes without limitation, any technical, commercial, scientific information, know-how, trade secrets, business ideas, processes, machinery, designs, drawings, technical specifications, and data in whatever form disclosed, that concern or relate to a Party's business, operations, styles of work or any other information that may be acquired by a Party pursuant to or in connection with this Agreement and including the existence and terms and conditions of this Agreement.

“**Consequential Loss**” means any loss or anticipated loss of profit, revenue, opportunity, goodwill or reputation, business interruption, loss of use of any equipment, loss of any contract or other business opportunities and any other indirect loss of a similar nature.

“**Control**” means the power to directly, indirectly, to direct or cause the direction of the management and policies of a person, whether through the ownership of voting securities or any interest carrying voting right, or to appoint or remove or cause the appointment or removal of any directors (or equivalent officials) or those of its directors (or equivalent officials) holding the majority of the voting rights on its board of directors (or equivalent body) whether by contract or otherwise, and "Controlled" shall be construed accordingly.

"**Corrupt Practice**” means, with respect to any person, the occurrence of any of the following:

(a) giving, offering, promising or proposing, directly or indirectly, any improper advantage financial or otherwise (including money, gifts, favours or other benefits) in order to influence the actions of a Party, a third party or a public official, in connection with the person’s conduct of a position, an office or performance of an assignment, function or activity;

(b) requesting, receiving or accepting, directly or indirectly, an offer, for oneself or others, of an improper advantage financial or otherwise (including money, gifts, favours or other benefits) in connection with the person’s conduct of a position, an office or performance of an assignment, function or activity;

(c) any improper payment intended to facilitate, expedite or secure the performance of a routine action, or any action to which one has legal or other entitlement; or

(d) requesting, accepting or receiving, for oneself, or others an improper advantage in return for influencing the conduct of another person's position, office or assignment,

(e) it being specified, for the purposes of this definition, that any other aspects of corruption such as fraud and money laundering of the proceeds of Corrupt Practices shall be considered as Corrupt Practices as well.

“**Cutover**” means the transition from the existing power source to the ESP Energy Equipment.

“**CP Deadline**” means the date falling **forty (40)** Business Days after the Signature Date.

“**DC**” means direct current.

“Default Interest Rate” means the interest that accrues on the unpaid amount at the prevailing monetary policy rate (MPR) of the Central Bank of Sierra Leone + 3%.

“**DG”** means Diesel Generator.

"**Discharge**" in relation to Fuel, means the transfer of the Fuel from the Energy Services Partner's loading truck, into the Fuel storage tank at a Site, confirmed by the remote management system; the terms, "**Discharged**" and "**Discharging**" shall be construed accordingly. The term shall also be construed in like matter if used in relation to other subjects.

"**Due Date**" in relation to Fuel, means the day when the Energy Services Partner is expected or obligated to deliver fuel to a site and Discharge into the Fuel storage tank at a Site. The term shall be construed in like manner if used in relation to other subjects.

"**Disclosing Party**" shall have the meaning ascribed thereto under Clause 31.1 of this Agreement.

"**Dispute**" shall have the meaning ascribed thereto in Clause 27.1.1 of this Agreement.

"**Disputed Amount**" shall have the meaning ascribed thereto in Clause 11.5.1.1 of this Agreement.

"**Effective Date**" refers to the date on which means the date that the last of the Conditions Precedent have been satisfied or waived in accordance with Clause 2.12 as confirmed in writing between the Parties.

"EIA" means Environmental Impact Assessment as defined in The Environment Protection Agency Act 2022..

"**Emergency**" means a sudden and unexpected event or circumstance which has caused, or reasonably threatens to cause: (a) serious bodily injury to any person at, or in the vicinity of, any Managed Site; or (b) serious physical damage to any Managed Site or to other material or property located at, or in the vicinity of, the Managed Site; or (c) a material impact on the environment.

"**Energy Fee**" means a fixed monthly payment in respect of the Services rendered and the power load delivered.

"**ERM**" means emergency response maintenance.

"ESG Incident" means a breach, near miss or incident related to compliance with ESG Laws or ESG Standards which occurs on or around the Customer's (or its Affiliates) premises, at the Site, or is in any way associated with the project.

"ESG Laws" means the applicable environmental, social and governance laws and regulations in Sierra Leone.

"ESG Standards" means the IFC Performance Standards on Environmental and Social Sustainability (2012) and associated Guidance Notes, the International Labour Organisation (ILO)'s Core Labour Conventions; and the System Owners' Code of Conduct.

"ESP Code of Conduct" means the Energy Services Partner's code of conduct and business principles, the version in force on the date of signature, or as may be amended or superseded from time to time by notice to the Customer.

"**ESP Energy Equipment**" means all equipment relating to the energy supply to a Managed Site as provided by the Energy Services Partner (whether owned or leased), including, but not limited to solar panels, solar MPPT converters, rectifiers, inverters, battery energy storage systems, diesel generators, fuel tanks, RMS, electrical networks within the boundary of the Site, electricity meters, fuel meters, switchgear, circuit breakers, fuses, protection devices and where applicable, Existing Assets.

"**Existing Assets"** means

(a) 4x PV + BESS systems from Alpha ESS supplied by Netis/Powerhive which will be expanded and updated to supply loads to both the Customer and End User.

(b) 552 x 535W JA Solar PV panels, and all its component parts which will be utilised to deploy the initial Sites, along with any additional assets that may be mutually agreed upon by the parties to be included as part of the existing assets to be purchased.

"**Exit Amount**" means, with respect to a given Managed Site, the relevant amount stated to be the Exit Amount in relation to a given termination or buy-out scenario as set out in Schedule 13 (Exit Amount).

"**Expiry Date**" means the date falling **ten (10) years** after the last Acceptance Date to occur or an earlier date if the Agreement is terminated in accordance with its terms.

"**Fees**" means the consideration payable to the Energy Services Partner in respect of the Services, in line with the prices stated in Schedule 3 (Pricing and Payment Terms) of this Agreement, exclusive of any applicable taxes

"**Force Majeure Event**" means any act, event, circumstance or combination thereof, which is beyond a Party's reasonable control, including by way of indication (but not as an exhaustive list) the events specified below, but in all cases, in so far as the relevant act, event, circumstance or combination thereof, prevent, hinder or delay the impacted Party (the "**Affected Party**") from performing all or part of its obligations under this Agreement:

(a) any civil disturbance, blockade, insurrection, revolution, riot, invasion or war (whether declared or otherwise), act of terrorism, uprising, sabotage or action by a public enemy;

(b) any fire, explosion, chemical explosion and act of God (including storm, flood, lightning, typhoon, tornado, soil erosion, subsidence, washout or epidemic or pandemic, hurricane, earthquake, or other natural disaster);

(c) any acts or orders by military, police, or civil authorities (whether national, local, or foreign),

(d) weather conditions not reasonably to be expected in the geographic areas where the Services are being carried out; and

(e) strike, lockout or industrial disturbance. any official or unofficial national strike, lockout, go-slow, or other such labour disputes, which shall include any strikes affecting the power and/or constructions sector generally in Sierra Leone, but excluding any strikes or equivalent action undertaken solely by the Parties' or their contractors' employees, contractors or personnel.

For the avoidance of doubt, the Parties agree that:

(i) failure of a subcontractor to perform its obligations shall not be deemed to be a Force Majeure Event unless such failure is itself caused by a Force Majeure Event;

(ii) any dispute that the End User or the Customer has with a third party (including with any mobile network operator and including as to non-payment) shall not be deemed to be a Force Majeure Event; and

(iii) inability to make payment shall not be deemed to be a Force Majeure Event.

"**Forced Labour**" has the meaning given to "forced or compulsory labour" in the ILO Forced Labour Standards.

"**Fraudulent Practice**" refers to any unfair practices (action or omission, including misrepresentation) intended to mislead a third party, conceal elements therefrom, or betray or vitiate his/her consent, contravening legal or regulatory obligations and/or breaching that Party's or a third party's internal rules for the purpose of obtaining an illegitimate benefit.

"**Fuel**" means the petroleum products used to power the ESP Energy Equipment.

"**Fuel Cost"** means the actual cost of fuel procurement at the prevailing market rate including any other costs related to fuel supply, in accordance with the agreed fuel allocation

"**Good Industry Practice**" means the exercise of that degree of skill, diligence, prudence and foresight in compliance with the undertakings and obligations under this Agreement which would reasonably and ordinarily be expected of a skilled and experienced person engaged in providing the Services or any similar services.

"**Government Authority**" means the government of, or any national, state or local government authority of Sierra Leone, including all regulatory, executive, legislative, judicial and administrative bodies or agencies thereof.

"**Government Official**" means (i) an officer or employee of a government or any department, agency or instrumentality thereof (which includes a government-owned or government-controlled state enterprise) or of a public international organization, such as the World Bank; (ii) a person acting in an official capacity for or on behalf of a government or government entity or of a public international organization, any political party or party official or any candidate for political office; or (iii) a family member of any of the foregoing.

"**GST**" means Goods and Services Tax in accordance with the Goods and Services Act 2009 (as amended) or other applicable law, as may be amended from time to time.

"**Hazardous Materials**" means and includes petroleum products, inflammable explosives, radioactive materials, asbestos, or any material containing asbestos, polychlorinated biphenyls, or any hazardous, toxic, or dangerous waste, substance or material defined as such or defined as a hazardous substance or any similar term, by, in or for the purposes of the environmental laws.

"**ILO**" means the International Labour Organization.

"**ILO Forced Labour Standards**" means the following publications of the ILO: the Forced Labour Convention 1930 (no.29), the Abolition of Forced Labour Convention 1957 (no.105); the Protocol of 2014 to the Forced Labour Convention, 1930; and the Forced Labour (Supplementary Measures) Recommendation, 2014.

"**Implementation**" means the design, procurement, installation and testing of the ESP Energy Equipment for Committed Sites as described in more detail in Schedule 9 (Implementation Scope).

"**Improvements**" means any alterations, replacements, modifications, and additions to the telecommunication infrastructure as may be installed on or made to all or any component of a Site.

"Insolvency Event" relation to a Party means that the Party:

(a) is dissolved (other than pursuant to a consolidation, amalgamation or merger);

(b) becomes insolvent or is unable to pay its debts or fails or admits in writing its inability generally to pay its debts as they become due;

(c) makes a general assignment, arrangement or composition with or for the benefit of its creditors;

(d) institutes or has instituted against it, by a regulator, supervisor or any similar official with primary insolvency, rehabilitative or regulatory jurisdiction over it in the jurisdiction of its incorporation or organisation or the jurisdiction of its head or home office, a proceeding seeking a judgment of insolvency or bankruptcy or any other relief under any bankruptcy or insolvency law or other similar law affecting creditors' rights, or a petition is presented for its winding-up or liquidation by it or has instituted against it a proceeding seeking a judgment of insolvency or bankruptcy or any other relief under any bankruptcy or insolvency law or other similar law affecting creditors' rights, or a petition is presented for its winding-up or liquidation, and, in the case of any such proceeding or petition instituted or presented against it, such proceeding or petition is instituted or presented by a person or entity not described in paragraph (d) above and:

(e) results in a judgment of insolvency or bankruptcy or the entry of an order for relief or the making of an order for its winding-up or liquidation; or

(f) is not dismissed, discharged, stayed or restrained in each case within 30 days of the institution or presentation thereof;

(g) has a resolution passed for its winding-up, official management or liquidation (other than pursuant to a consolidation, amalgamation or merger);

(h) seeks or becomes subject to the appointment of an administrator, provisional liquidator, conservator, receiver, trustee, custodian or other similar official for it or for all or substantially all its assets (other than, for so long as it is required by law or regulation not to be publicly disclosed, any such appointment which is to be made, or is made, by a person or entity described in paragraph (d) above);

(i) has a secured party take possession of all or substantially all its assets or has a distress, execution, attachment, sequestration or other legal process levied, enforced or sued on or against all or substantially all its assets and such secured party maintains possession or any such process is not dismissed, discharged, stayed or restrained, in each case within **thirty (30) days** thereafter;

(j) causes or is subject to any event with respect to it which, under the applicable laws of any jurisdiction, has an analogous effect to any of the events specified in paragraphs (a) to (i) above; or

(k) takes any action in furtherance of, or indicating its consent to, approval of, or acquiescence in, any of the foregoing acts.

"IOT" means Internet of Things.

"**KPI**" means key performance indicator.

"**kW**" means kilowatt(s) of power.

"**kWp**" means kilowatt peak, which specifies the output power achieved by a power solution when in full operation.

"**Landlord**" means the owner and/or person with a legal and beneficial interest in the landed property upon which a Site is built or located.

"**Liabilities**" shall have the meaning ascribed thereto under Clause 32.1.

"**Managed Site**" means any Committed Site which has undergone a Technical Site Survey Period, for which the process of Implementation is complete, the Acceptance Date and Cutover have been achieved and the Services have commenced.

"**Minimum Acceptability Conditions**" means the minimum criteria a Committed Site must comply with to be acceptable for the Energy Services Partner to proceed to Implementation for such Committed Site, as set out in Schedule 1 (Scope of Work and Services).

"**Money Laundering Activities**" means:

(a) providing assistance to another person (natural or legal) in safeguarding the proceeds derived from criminal activity, including any Corrupt Practices, or from an act of participation in such activity. Such assistance may include, for example, collecting, storing, concealing, transporting, sending, transferring, converting, disposing, pawning or investing the proceeds;

(b) converting or transferring assets to conceal or disguise the proceeds of a criminal act one has personally committed, or participated in. Such activity may include, for example, concealing and disguising the proceeds true nature, source, location, disposition, movement, or rights associated with them;

(c) acquiring, receiving or obtaining proceeds derived from criminal activity; or

(d) the definition as set out in section 1 of the Anti-Money Laundering and Combating of Financing of Terrorism and Financing the Proliferation of Weapons of Mass Destruction Act, 2024 Sierra Leone

"**MTTR**" means mean time to repair.

"**NOC**" means the network operation centre of the End User.

"**OEM**" means the original equipment manufacturer.

"**O&M**" means operation and maintenance which inter alia includes the preventative and routine maintenance of existing assets within a Managed Site.

"**Objectionable Practices**" means any Corrupt Practice, Fraudulent Practice, Money Laundering Activities, Obstructive Practice, Sanctionable Practice or Terrorist Financing.

"**Obstructive Practice**" means: (i) deliberately destroying, falsifying, altering or concealing evidence material to the investigation or making of false statements, in order to materially impede a government, a lender, or third party investigation into allegations of a Coercive Practice, Collusive Practice, Corrupt Practice, Fraudulent Practice, and/or threatening, harassing or intimidating any party to prevent it from disclosing its knowledge of matters relevant to the investigation or from pursuing the investigation; or (ii) acts intended to materially impede the exercise of a government's, a lender's or third party's access to the contractually required information in connection with an investigation into allegations of a Coercive Practice, Collusive Practice, Corrupt Practice or Fraudulent Practice.

"**OPEX**" means the operating expenditure.

"**Payment Security"** means an escrow account to be set up in Mauritius, which account shall be required to maintain a minimum balance of the equivalent of **six (6) months** of advance Fees to be drawn on by the Energy Services Partner based on the following conditions:

(a) The Customer refuses or fails to pay the Fees in accordance with the Agreement; or

(b) The Customer and/or the End User experiences an Insolvency Event.

"**Passive Infrastructure**" means all passive physical components of a Managed Site and includes the land, mast, air conditioning, lighting equipment, building enclosures (including any sheds, huts or shelters), fencing, gates, locks, site alarms, tools, equipment, fixtures, spare parts and other tangible personal property and/or any passive components that are not ESP Energy Equipment or Telecom Equipment.

"**Performance Standards**" includes the International Finance Corporation's Performance Standards on Social & Environmental Sustainability, the version in force on date of signature available at http://www.ifc.org/wps/wcm/connect/topics_ext_content/ifc_external_corporate_site/ifc+sustainability/our+approach/risk+management/performance+standards/environmental+and+social+performance+standards+and+guidance+notes, as may be amended or replaced from time to time.

"**Penalties**" means the penalties for failure to achieve the service levels set out in Schedule 4 (SLA and Penalties)**.**

"**Penalties Cap**" has the meaning ascribed thereto under Clause 18.3.

"**Phase**" means a number of Managed Sites determined by the Energy Services Partner as forming part of a Phase (and for the avoidance of doubt, a Phase may not include every Committed Site that was within the corresponding Proposed Phase).

"**Phase Delay Damages**" has the meaning given to it in Clause 5.3.2.

"**Phase Delay Damages Cap**" has the meaning given to it in Clause 5.3.7.

"**PL**" means the performance level of a Site.

"**PM**" means preventive maintenance.

"**PPM**" means planned preventive maintenance.

"**Proposed Phase**" means a number of Committed Sites proposed by the Energy Services Partner to undergo a Technical Site Survey Period.

"**RC**" means root cause.

"**Recipient**" shall have the meaning ascribed thereto under Clause 31.1 of this Agreement.

"**Reconditioning Work**" means any snagging or corrective works required at any Committed Site further to a Technical Site Survey Report.

"**Relevant Records**" means data, records, materials and documents in any media and format within the possession or control of the Energy Services Partner or any of its subcontractors, from time to time which relate to the Services or otherwise relate to the performance of the Energy Services Partner's obligations under this Agreement.

"**RMS**" means remote monitoring system.

"**Sanctions**" means any laws, codes, regulations, decrees, orders, decisions, rules or requirements of any nature relating to economic or financial sanctions or restrictive

measures which are administered, imposed or enforced from time to time by any Sanctions Authority.

"**Sanctions Authority**" means the United Nations, the United States of America (including the US Department of the Treasury, the US Department of Commerce and the US State Department), the European Union or any member state thereof, the Council of Europe (founded under the Treaty of London, 1946), the United Kingdom, including His Majesty's Treasury, the Norwegian state, the government of South Africa or any other national or supranational economic sanctions authority regulating the behaviour of a Party (or a holding company thereof).

"**Scheduled Phase Completion Date**" means the date set out in Schedule 10 (Scheduled Phase Completion Date and Delay Damages) by which, for a given Proposed Phase, the Energy Services Partner must have achieved the Acceptance Date for all the Committed Sites forming part of the given Proposed Phase.

"**Services**" shall have the meaning ascribed thereto under **recital (d)** of this Agreement and Interim Power, where applicable in Clause 5.3.2.

"Services Fee" shall cover the ESP Energy Equipment maintenance, fuel management (including the security of fuel in transit), any additional services such as general site maintenance, janitorial, etc.

"Signature Date" means the date the last of the Parties sign this Agreement.

"**Site**" shall have the meaning ascribed thereto under **recital (e)** of this Agreement.

"**SLA**" means service level agreement setting out what is expected of the Energy Services Partner in respect of the Services as set out in Schedule 4 (SLA and Penalties).

"**SOP**" means standard operating procedure, which entails the written procedures for repetitive use as a practice in accordance with agreed specifications aimed at obtaining a desired outcome.

"**Tax**" means all applicable taxes, duties, and levies payable to the relevant Government Authority in respect of this Agreement.

"**Technical Site Survey**" has the meaning given to it in Clause 3.2.1.

"**Technical Site Survey Commencement**" has the meaning given to it in Clause 3.3.2.

"**Technical Site Survey Finalisation**" has the meaning given to it in Clause 3.4.4.

"**Technical Site Survey Period**" means, in respect of any given Proposed Phase, the period from Technical Site Survey Commencement to Technical Site Survey Finalisation.

"**Technical Site Survey Report**" has the meaning given to it in Clause 3.4.2.

"**Telecom Equipment**" means with respect to any Managed Site, the transmitting and/or receiving equipment and other equipment installed at such Managed Site and owned, operated or controlled by either the End User or the Customer, including:

(a) switches, antennas, microwave dishes, wireless and wireline cable runs, panels, conduits, flexible transmission lines, cables, radio, amplifiers, filters and other transmission or communications equipment (including interconnect transmission equipment, transmitter(s), receiver(s) and accessories);

(b) such other equipment and associated software as may be necessary in order to provide any relevant wireless and wireline communication services, including voice or data; and

(c) any existing, future, replaced or upgraded Telecom Equipment as described above.

"**Tenants**" means any telecommunication operator whose antennae and other active infrastructure are mounted at a Site.

"**Termination**" means termination of this Agreement pursuant to a Termination Notice or otherwise in accordance with the provisions of this Agreement but shall not, unless the context otherwise requires, include expiry of this Agreement due to effluxion of time in the normal course.

"**Termination Notice**" means a notice of Termination of this Agreement by one Party, served on the other Party in accordance with the applicable provisions of this Agreement, including under Clause 33.2 (Termination for ESP Default) or Clause 33.3 (Termination for End User Default).

Terrorist Financing" means the act of providing or collecting funds with the intention that they would be used, or in the knowledge that they are to be used, in order to carry out terrorist acts.

"**Tower**" means with respect to a Site, any pole, spire, mast or other structure constructed primarily for the purpose of supporting the installation of Telecom Equipment.

"**Trade Authority**" shall have the meaning ascribed thereto in Clause 23.3 of this Agreement.

"**WHT**" means the withholding tax properly chargeable thereon by the Government of Sierra Leone in relation to the Services.

"**Withdrawal Notice**" means a written notice of withdrawal of a Managed Site from the scope of this Agreement by one Party, served on the other Party in accordance with the applicable provisions of this Agreement including under Clause 26.3 or Clause 33.1.

"**Withdrawn Site**" means a Managed Site that is the subject of a Withdrawal Notice.

1.2 Interpretations

1.2.1 Words importing the singular shall include the plural and vice versa, and words denoting natural persons shall include partnerships, firms, companies, corporations, unincorporated bodies, joint ventures, trusts, associations, organizations or other entities (in each case, whether or not having separate legal personality).

1.2.2 The headings are for convenience of reference only and shall not be used in, and shall not affect the meaning, construction, interpretation or scope of this Agreement or the provisions it relates to.

1.2.3 The words "include" and "including" are to be construed without limitation.

1.2.4 Any reference to; day, month or year shall mean a reference to a calendar day, 30 days or 365 days respectively, unless otherwise specified.

1.2.5 The schedules and appendices to this Agreement form an integral part of this Agreement as though they were expressly set out in the body of this Agreement. In

case of any discrepancy between the schedules and appendices and the body of the Agreement, the latter shall prevail.

1.2.6 Any reference at any time to any agreement, deed, instrument, license or document of any description shall be construed as reference to that agreement, deed, instrument, license or other document as amended, varied, supplemented, modified ended at the time of such reference.

1.2.7 References to recitals, clauses, sub-clauses or schedules in this Agreement shall, except where the context otherwise requires, be deemed to be references to recitals, clauses, sub-clauses and schedule of or to this Agreement.

1.2.8 The expression “this Clause” shall, unless followed by reference to a specific provision, be deemed to refer to the whole clause and not merely the subclause, paragraph or other provision, within which the expression falls.

1.2.9 The expression “in writing” includes any communication made by letter or email to the recipient’s email address.

1.2.10 Unless otherwise defined, words or terms used in this Agreement shall have their literal English meanings. Where any inconsistency between or among different language versions of the counterparts exists, the English language version shall prevail.

1.2.11 Any agreement, consent, approval, authorization, notice, communication, information or report required under or pursuant to this Agreement from or by any Party shall be valid and effectual only if it is in writing under the hands of duly authorized representatives of such Party on its behalf and not otherwise.

1.2.12 Any reference to any period commencing “from” a specified day or date and “till” or “until” a specified day or date shall include both such days and dates.

1.2.13 Any reference to any statute, statutory provision or statutory instrument shall include any re-enactment or amendment thereof for the time being in force.

2 ENGAGEMENT

2.1 Object of this Agreement

2.1.1 Relying on the Energy Services Partner’s representations, the End User and the Customer hereby engage the Energy Services Partner and the Energy Services Partner hereby agrees to be engaged by the End User and the Customer to provide the Services in accordance with the terms and conditions of this Agreement (including without limitation Schedule 1 (Scope of Work and Services) and such other services as may be agreed by the Parties from time to time, which engagement the Energy Services Partner accepts.

2.1.2 The Energy Services Partner shall at all relevant times, employ Good Industry Practice, and comply with the Performance Standards and all Applicable Laws.

2.1 Conditions Precedent and Effective Date

2.1.1 Clauses 1,2,3,12,22,23,27,28,29,31,38,39,40,41 and 42 of this Agreement shall come into effect on the Signature Date. The remaining provisions of this Agreement come into effect on the Effective Date.

2.1.2 The Effective Date will be the date on which all of the Conditions Precedent have been satisfied or waived by the Party entitled to the benefit of such Condition Precedent. The Parties must jointly certify in writing the occurrence of the Effective Date within five (5) Business Days after satisfaction or waiver of all Conditions Precedent.

Satisfaction and Waiver

2.1.3 Each Party must use best endeavours to satisfy the following Conditions Precedent by no later than the CP Deadline, and shall promptly inform the other Party in writing when a Condition Precedent is satisfied or if a Condition Precedent is incapable of being satisfied by the CP Deadline:

Conditions Precedent

2.1.3.1 Receipt of the environmental permits for the Sites;

2.1.3.2 Receipt of the Insurance policies.

2.1.4 If the Conditions Precedents are not fulfilled or waived by the CP Deadline, or such extended date as the Parties may agree in writing prior to the CP Deadline, this Agreement shall lapse and be of no further force and effect.

3 TECHNICAL SITE SURVEY

3.1 General

3.1.1 Each Proposed Phase shall be the subject of a Technical Site Survey Period.

3.2 Technical Site Survey

3.2.1 In respect of each Proposed Phase, the Energy Services Partner shall perform an audit of every Committed Site in such Proposed Phase in order to ascertain the status and condition of such Committed Site, including at least the elements set out in Schedule 8 (Requirements for Technical Site Survey of Committed Site) (each a "**Technical Site Survey**").

3.3 Technical Site Survey Commencement

3.3.1 The Energy Services Partner may at any time propose to the Customer a list of Committed Sites to be a Proposed Phase. The Customer shall review such list and respond within **fourteen (14) days** with approval, or comments on such list. The Energy Services Partner shall consider any comments and make any reasonable adjustments to the proposed list and re-submit to the Customer. The list shall be deemed to be agreed between the Parties if (a) approved by the Customer; or (b) the Customer fails to make any comments within the **fourteen 14-day** period above, after which the Energy Services Partner shall issue a **five (5)-day** reminder to the Customer and the Customer still fails to respond after the **five (5)-day** period or (c) **five (5) days** have elapsed after re-submission of such list by the Energy Services Partner as set out above.

3.3.2 The Energy Services Partner shall commence:

3.3.2.1 the Technical Site Survey of the first Proposed Phase one (1) week after the Effective Date; and

3.3.2.2 the Technical Site Survey of each other Proposed Phase one (1) week after the list of Committed Sites in the Proposed Phase has been deemed agreed under Clause 3.3.1 above,

(the "**Technical Site Survey Commencement**").

3.3.3 Without prejudice to the processes set out in this Clause 3.3 the Parties shall seek to deploy Sites in accordance with the deployment plan stipulated in Schedule 9 (Implementation Scope).

3.4 Technical Site Survey Finalisation

3.4.1 The Energy Services Partner shall perform each Technical Site Survey with all due expeditions and shall complete such Technical Site Survey within a reasonable time, taking into account the number of Committed Sites in the Proposed Phase in question, geographical location, and any other relevant factors.

3.4.2 The Energy Services Partner shall issue to the Customer a draft written report (the "**Technical Site Survey Report**") setting out the conclusions of each Technical Site Survey:

3.4.2.1 by reference to the items in Schedule 8 (Requirements for Technical Site Survey of Committed Sites);

3.4.2.2 including any proposals for Reconditioning Work required at any Committed Site in order to comply with the Minimum Acceptability Conditions;

3.4.2.3 including which Committed Sites are acceptable to proceed to Implementation in their current state;

3.4.2.4 including any changes to the technical configuration required for each Committed Site (if and to the extent different from any assumed technical configuration prior to the Technical Site Survey); and

3.4.2.5 including the fees (and fee categories) applicable to each Committed Site within the relevant Technical Site Survey for the purposes of Clause 11.1 and Schedule 3 (Pricing and Payment Terms).

3.4.3 The Customer shall review the draft Technical Site Survey Report and respond within **fourteen (14) days** with approval, or comments.

3.4.4 The Energy Services Partner shall consider any comments and make any reasonable adjustments to the draft Technical Site Survey Report and re-submit to the Customer. The Technical Site Survey Report shall be deemed to be agreed between the Parties if (a) approved by the Customer; or (b) the Customer fails to make any comments within the **fourteen (14)-day** period above, after which the Energy Services Partner shall issue a **five (5)-day** reminder to the Customer and the Customer still fails to respond, after the **five (5)-day** period, or (c) **five (5) days** have elapsed after re-submission of the Technical Site Survey Report by the Energy Services Partner as set out above (hereinafter referred to as "**Technical Site Survey Finalisation**"). The Energy Services Partner shall not however be liable for any delay resulting from the Customer's late approval.

3.5 Reconditioning Work

3.5.1 Where the Technical Site Survey Report has identified any Reconditioning Work proposed by the Energy Services Partner at a Committed Site in order to comply with the Minimum Acceptability Conditions, the Energy Services Partner shall within a reasonable time provide to the Customer a proposal as to scope of work and timing for the execution of the relevant Reconditioning Work.

3.5.2 The Customer shall review such proposal and respond within **fourteen (14) days** with approval, or comments on such proposal. The Energy Services Partner shall consider any comments and make any reasonable adjustments to the proposal and re-submit to the Customer. The proposal shall be deemed to be agreed between the Parties if: (a) approved by the Customer; or (b) the Customer fails to make any comments within the **fourteen (14)-day** period above, after which the Energy Services Partner shall issue a **five (5)-day** reminder to the Customer and the Customer still fails to respond after the **five (5)-day** period; or (c) **five (5) days** have elapsed after re-submission of such proposal by the Energy Services Partner as set out above. The Energy Services

Partner shall not however be liable for any delay resulting from the Customer's late approval.

3.5.3 In the event that the Customer rejects a proposal for Reconditioning Work (whether such rejection is outright or is comprised of comments that substantively amount to a rejection), the Energy Services Partner shall be entitled to reject the relevant Committed Site and select another Committed Site to form part of the Proposed Phase.

3.5.4 The Energy Services Partner shall perform the relevant Reconditioning Work in accordance with each agreed proposal or the Customer may elect to carry out the works independently, and in both cases to ensure compliance with the Minimum Acceptability Conditions.

3.6 Proceeding to Implementation

3.6.1 The Energy Services Partner may select some or all of the Committed Sites in a Proposed Phase to proceed to Implementation in accordance with Clause 5, provided always that (a) each Committed Site has been the subject of an accepted (or deemed accepted) Technical Site Survey Report, and (b) if the accepted (or deemed accepted) Technical Site Survey Report for a Committed Site proposed that Reconditioning Work was required, such Reconditioning Work has been completed.

3.6.2 For the avoidance of doubt, the Customer or the End User may not object to the Energy Services Partner's selection of Committed Sites to proceed to Implementation where the requirements of Clause 3.6.1 above are satisfied for each of the Committed Sites in question.

4 EARLY PROCUREMENT OF ESP ENERGY EQUIPMENT

4.1 Early Procurement of ESP Energy Equipment

4.1.1 The Energy Services Partner shall make reasonable endeavours to ensure the early procurement of the ESP Energy Equipment as required to deliver the Services, subject to the approval of the Energy Services Partner's internal development committee and board.

4.1.2 This early procurement is undertaken in accordance with the terms of the procurement agreement signed by the Parties dated 29th July, 2024. Under this agreement, the Customer and the End User jointly and severally indemnify the Energy Services Partner against any losses, costs, liabilities, and expenses incurred due to the project not proceeding to completion. This indemnification covers but is not limited to, the costs of procuring ESP Energy Equipment, contractual penalties, and any other financial liabilities arising from the premature termination or suspension of the project.

5 IMPLEMENTATION

5.1 Commencement of Implementation

On and from the later of (a) Technical Site Survey Finalisation or (b) completion of any applicable Reconditioning Work for a given Committed Site, the Energy Services Partner shall commence the Implementation for that Committed Site.

5.2 Acceptance of the Implementation

5.2.1 The "**Acceptance**" of the Implementation at a Committed Site shall be achieved when:

5.2.1.1 the Implementation at such Committed Site has been completed in accordance with this Agreement and except for Punch List Items;

5.2.1.2 the Implementation has passed all the Acceptance Tests relevant to the Committed Site in question, as set out in Schedule 9 (Implementation Scope); and

5.2.1.3 an Acceptance Certificate for the Implementation has been issued, or is deemed to have been issued, in accordance with this Clause.

5.2.2 The Energy Services Partner may apply by written notice to the Customer for an Acceptance Certificate before the Implementation will, in the Energy Services Partner's opinion, be complete and ready for Acceptance.

5.2.3 The Customer shall, within **five (5) Business Days** after the Energy Services Partner has completed the Acceptance Tests, either:

5.2.3.1 issue the Acceptance Certificate to the Energy Services Partner, stating the date on which the Implementation was completed in accordance with this Agreement, except for any minor outstanding work and defects which will not substantially affect the use of the Implementation for their intended purpose (the "**Punch List Items**"); or

5.2.3.2 reject the application, giving reasons and specifying the work required to be done by the Energy Services Partner to enable the Acceptance Certificate to be issued. The Energy Services Partner shall then complete the work before issuing a further notice under this Clause.

5.2.4 If the Customer fails either to issue the Acceptance Certificate or to reject the Energy Services Partner's application within the above-mentioned period of **five (5) Business Days**, the Energy Services Partner shall send the Customer a **five (5) Business Day** reminder and where the Customer fails to respond after the **five (5) Business Day** period, and if the Implementation is substantially in accordance with this Agreement, the Acceptance Certificate shall be deemed to have been issued on the last day of that period.

5.2.5 Following issuance of the Acceptance Certificate, the Energy Services Partner shall work diligently to complete all Punch List Items within **one (1) calendar month** of issuance or deemed issuance, as applicable, of the Acceptance Certificate, unless otherwise agreed by the Parties. Following the issuance of the Acceptance Certificate, the Committed Site may be Cutover and the Services shall commence.

5.3 Delay, Interim Power and Liquidated Damages

5.3.1 The Energy Services Partner shall complete the Implementation and achieve the Acceptance Date in respect of a Committed Site no later than the Scheduled Phase Completion Date for the Proposed Phase in which such Committed Site falls. Upon achievement of the Acceptance Date, a Committed Site becomes a Managed Site, and upon achievement of the Acceptance Date for all Committed Sites in a Proposed Phase, a Proposed Phase becomes a Phase, for the purposes of this Agreement.

5.3.2 In the event that the ESP Energy Equipment availability prevents the Energy Services Partner from achieving the Acceptance Dates in a Proposed Phase by the Scheduled Phase Completion Date for that Proposed Phase, the Energy Services Partner may install and operate an interim power system ("**Interim Power**") for a maximum period of **four (4) months**, until the Energy Services Partner can achieve the Acceptance Date for the relevant Committed Sites.

5.3.3 If post the **four (4) months** period**,** the Energy Services Partner still fails to achieve the Acceptance Dates of seventy per cent (70%) of the Committed Sites in a Proposed Phase by the Scheduled Phase Completion Date for that Proposed Phase, the Energy Services Partner shall pay to the Customer delay liquidated damages ("**Phase Delay Damages**") for this default. These Phase Delay Damages shall be the sum stated in

Schedule 10 (Scheduled Phase Completion Date and Delay Damages) which shall be paid per Committed Site that has not achieved its Acceptance Date on or before the Scheduled Phase Completion Date for every day of the period commencing on (and including) the day after the relevant Scheduled Phase Completion Date and ending on the Acceptance Date for the relevant Committed Site.

5.3.4 Accrued Phase Delay Damages shall be invoiced by the Customer on the final day of each month in respect of that month, and the Energy Services Partner shall pay the amount set out in such invoice no later than **sixty (60) days** after the date thereof.

5.3.5 If, after any deduction or payment of Phase Delay Damages, an extension of time is made to the relevant Scheduled Phase Completion Date, the Customer shall refund to the Energy Services Partner any Phase Delay Damages previously paid or allowed in respect of the period of such extension of time. For the avoidance of doubt, such refunded Phase Delay Damages shall not count towards any cap on the Energy Services Partner's liability under this Agreement.

5.3.6 Phase Delay Damages shall be the sole and exclusive remedy available to the Customer for the Acceptance Date in respect of a Proposed Phase being delayed beyond the relevant Scheduled Phase Completion Date.

5.3.7 Where the Customer elects to charge Phase Delay Damages, the Energy Services Partner's aggregate liability for Phase Delay Damages under this Agreement shall not exceed **ten percent (10%)** of the Services Fees payable to the Energy Services Partner in that month (the "**Phase Delay Damages Cap**").

5.4 Extension of Time

5.4.1 The Energy Services Partner shall be entitled to an extension of the Scheduled Phase Completion Date for any Proposed Phase to the extent that the relevant Acceptance Date is or will be delayed by any of the following causes:

5.4.1.1 amendment to the provisions of this Agreement at the initiative of the Customer;

5.4.1.2 suspension by the Customer of any works being carried out by the Energy Services Partner;

5.4.1.3 occurrence of a Force Majeure Event;

5.4.1.4 any delay, obstruction, impediment, prevention or default attributable to the Customer or End User, its employees or other contractors or agents (excluding the Energy Services Partner) or network partners.

6 NUMBER OF MANAGED SITES

6.1 Number of Managed Sites

6.1.1 The Customer agrees and acknowledges that the Energy Services Partner shall provide the Services in consideration for the Fees in accordance with the Deployment Plan

6.1.2 The Parties shall work in accordance with Clause 3 in order to select at least 37 Managed Sites, initially from the Committed Sites set out in Schedule 5 (List of Committed Sites). If and to the extent that the agreed number of Managed Sites cannot be selected from the Committed Sites set out in Schedule 5 (List of Committed Sites), the Customer shall provide to the Energy Services Partner further Committed Sites suitable to be included within the remit of this Agreement.

6.2 Additional Sites

6.2.1 The Parties shall use their best endeavours to extend the remit of this Agreement beyond the 72 Managed Sites.

6.2.2 Additional Sites shall be subject to the procedures set out in Clause 3 and Clause 5 and upon completion of such procedures such Additional Sites shall be governed by this Agreement such that subject to the aforementioned clauses, such Additional Sites shall therefore assume the status of, and shall be termed Managed Sites.

7 RELOCATION OF MANAGED SITES

7.1 The Parties acknowledge that it may be necessary for the Customer or the End User to cease the Services at a Managed Site. In such case, the Customer will provide a written notice to the Energy Services Partner as soon as possible after Customer becomes aware of the need to do so, providing the Energy Services Partner with as much information as possible regarding the need for and the circumstances necessitating such cessation.

7.2 The Customer will use its best endeavours to secure an alternative location for the equipment at the affected Managed Site as soon as reasonably practicable. The Customer shall be responsible for obtaining all necessary land rights and access rights to enable any such new location to be used as a Managed Site for the purposes of this Agreement, and the Energy Services Partner shall have no obligations to relocate any equipment to such new location if the Customer has not provided reasonable evidence to the Energy Services Partner that such land rights and access are valid and in effect.

7.3 If the cessation of the Services at a Managed Site will result in the relevant ESP Energy Equipment no longer being suitable for a relocation, this Clause 7 shall not apply, and the Parties agree that Clause 8 shall apply. The Energy Services Partner may refuse the relocation of a Managed Site, provided the Energy Services Partner notifies the Customer and demonstrates to the Customer that the ESP Energy Equipment cannot be substantially re-used at the relocated Managed Site.

7.4 Where the Customer secures a new location for a Managed Site, the provisions of Clause 3.4 and Clause 3.5 shall apply as applicable.

7.5 The Energy Services Partner shall proceed to the Implementation of the proposed new location for the Managed Site in accordance with Clause 5, provided always that (a) each such new location has been the subject of an accepted (or deemed accepted) Technical Site Survey Report, and (b) if the accepted (or deemed accepted) Technical Site Survey Report for such new location proposed that Reconditioning Work was required, such Reconditioning Work has been completed.

7.6 Subject to the Customer providing access to such location, the Energy Services Partner shall then perform the relevant works to relocate the ESP Energy Equipment in question, in accordance with each agreed proposal.

7.7 If the Customer fails to find a new location to replace the affected Managed Site, that Managed Site shall be removed from the scope of this Agreement, and the Customer shall pay to the Energy Services Partner, in return for the transfer of title in the ESP Energy Equipment at the affected Managed Site, the Exit Amount in respect of the relevant Managed Site.

8 VARIATIONS

8.1 Each Party may, at any time, submit to the other Party a written proposal to vary the Services (including any change to the ESP Energy Equipment, whether arising from a relocation of a Managed Site, a change to the Telecom Equipment, a change in energy demand at a Managed Site, a change to a multi-site project or otherwise). Further guidance on the process for such proposal of variation is set out in Schedule 1 (Scope of Work: Energy Services).

8.2 Such proposal shall include, at minimum, the following:

8.2.1 a description of the proposed work and/or services to be performed and a programme for its execution;

8.2.2 a proposal for the cost of same;

8.2.3 any change to the Fees (including any upgrade fees) applicable to a Managed Site that would result from the proposed work and/or services; and

8.2.4 any other amendments proposed to this Agreement in connection with such proposed work and/or services.

8.3 The receiving Party shall review such proposal and respond within **twenty (20) days** with approval, or comments on such. The issuing Party shall consider any comments and discuss such comments in good faith make any reasonable adjustments to the proposed variation and re-submit to the receiving Party for approval within **twenty (20) days**.

8.4 The Parties agree that no variation shall be binding unless agreed in writing and signed by both Parties.

9 COMMENCEMENT AND DURATION

9.1 This Agreement shall come into full force and effect on the Effective Date and shall subsist until the Expiry Date (the "**Term**"), subject to the termination provisions of the Agreement.

9.2 Notwithstanding the above, the terms of this Agreement shall be deemed to have applied or shall be deemed to apply to any and all aspects and/or elements of the Technical Site Surveys, procurement and/or execution of the Services commenced before the Effective Date.

10 PURCHASE OF EXISTING ASSETS

10.1 Purchase Option

10.1.1 The Energy Services Partner has the option at any time during the Term of this Agreement to purchase the Existing Assets from the Customer by way of notice ("**Purchase Option**"). Notwithstanding this option, any such purchase shall not occur prior to the Acceptance Date.

10.1.2 The Energy Services Partner shall be entitled to exercise the Purchase Option upon delivery of a purchase request in writing to the Customer at any time during the term, and upon the exercise of the Purchase Option, the sale of the Existing Assets shall automatically take effect wherein the Energy Services Partner agrees to purchase, and the Customer agrees to sell, the Existing Assets

10.1.3 The specific terms and conditions governing this sale will be outlined in a subsequent agreement to be negotiated, agreed upon and executed by the Parties.

11 CONSIDERATION, INVOICING AND PAYMENT TERMS

11.1 Fees

11.1.1 In consideration for the Services to be provided by the Energy Services Partner, the Customer shall pay the Energy Services Partner in accordance with the Fees, comprising of the Energy Fee, Services Fee and the Fuel Cost as set out in Schedule 3 (Pricing and Payment Terms).

11.1.2 The Fees applicable for each Managed Site shall be determined by the categorisation of that Managed Site set out in the accepted (or deemed accepted) Technical Site Survey applicable to that Managed Site.

11.1.3 Any change to the Fees shall be reflected in writing and signed by both Parties.

11.2 Invoicing

11.2.1 The Energy Services Partner shall submit an invoice to the Customer each month for all Fees for the Services provided during the preceding month. Such invoices shall be submitted to the Customer representative, or via any other means agreed in advance in writing between the Parties.

11.2.2 Each invoice shall include:

11.2.2.1 a reference to this Agreement;

11.2.2.2 the breakdown of the Services provided and the applicable Fees for each Managed Site;

11.2.2.3 the name, address and GST registration number of the Energy Services Partner; and

11.2.2.4 bank details for the Energy Services Partner bank account into which payments shall be transferred.

11.3 Payment

11.3.1 The Customer shall pay all amounts due on or before the date that falls **thirty (30) days** after the date of receipt of the Energy Service Partner's invoice.

11.3.2 Payments will be considered effectively made when credited to the bank account of the Energy Services Partner.

11.3.3 Where the Customer defaults in paying the Fees or any other amount due to the Energy Services Partner hereunder within the applicable due date or any other period allowed in writing by the Energy Services Partner, the Energy Services Partner shall, upon the provision of a written notice of non-payment to the Customer, draw on the Payment Security for the settlement of such unpaid amount. Upon such drawing, the Energy Services Partner shall provide notice to the Customer within **three (3) Business Days** and the Customer shall, as soon as practicable and in any event within **seven (7) Business Days** of the receipt of the notice of the drawing, replenish the Payment Security.

11.3.4 In addition to the above, if the Customer fails to pay any amount due within the specified period, after being notified of this within **three 3 Business Days** from the notice, the Customer shall be liable to pay the Default Interest Rate on the unpaid amount from the due date until the date of the actual payment.

11.3.5 For the avoidance of doubt, it shall be the responsibility of the Customer, and not the Energy Services Partner, to ensure that all invoices received from the Energy Services Partner are promptly shared with the End User. The internal distribution of such invoices between the Customer and the End User shall not, under any circumstances, cause a delay in the payment of said invoices by the agreed due date.

11.4 Currency

11.4.1 Unless otherwise agreed in writing, all payments shall be made in United States Dollars (US$).

11.5 Disputed Invoice

11.5.1 If a Party reasonably and in good faith disputes an obligation to pay all or part of an invoice submitted by the other Party under this Agreement, then notwithstanding anything to the contrary in this Agreement:

11.5.1.1 the Party disputing the invoice must within **fourteen (14) days** of receipt of the invoice notify the other Party in writing of the amount of the invoice which it disputes ("**Disputed Amount**") with detailed reasons why it is disputing the Disputed Amount;

11.5.2 such Party shall within **ten (10) Business Days** of notification of the Disputed Amount refer the matter to dispute resolution in accordance with the dispute resolution procedure under this Agreement

11.5.3 such Party shall nonetheless pay the Disputed Amount. The parties agree that the disputing party shall be entitled for a full refund of any overpayment **thirty (30) Business Days** refund any excess payments or make good any payment shortfall due to the Party as a result of the resolution of the invoicing dispute.

11.5.3.1 such Party must also pay any undisputed part of the invoice in accordance with this Agreement;

11.6 No Set-off

All payments by the Customer to the Energy Service Partner under this Agreement shall be made without deduction or withholding on account of any other amount, whether by way of set-off or otherwise, unless (and then only to the extent) required by Applicable Law.

12 REPRESENTATIONS AND WARRANTIES

12.1 Each Party represents and warrants to the other Party that:

12.1.1 it is a duly incorporated entity and validly existing under the Applicable Laws;

12.1.2 it has obtained all necessary Approvals it is obliged to obtain under this Agreement as outlined in Schedule 12 (Approvals), and such Approvals will be in full force and effect and all conditions of such Approvals will have been complied with.

12.1.3 it has all requisite power and authority to enter into this Agreement and to perform the obligations contemplated thereby and the execution, delivery and performance of this Agreement has been duly authorized by all necessary action on its part.

12.1.1 its obligation under this Agreement constitutes its valid, legal and binding obligations, enforceable against it in accordance with its terms;

12.1.2 it is not currently in breach of, in default under, or in violation of, and the execution and delivery of this Agreement and the performance of its obligations hereunder will not constitute or result in any breach of, default under, or violation of, any Law or the provisions of such Party's organisational documents or any agreement or instrument to which such Party is bound or to which its assets are subject, which breach, default or violation could reasonably be expected to have a material adverse effect on the ability of such Party to observe the provisions of, and to perform its obligations under, this Agreement.

12.1.3 it will perform and deliver the Services in accordance with the applicable professional standards, and with due observance of the care that may be expected from each Party.

12.1.4 it has the necessary skill, experience and expertise to carry out the Services.

12.1.5 this Agreement constitutes the legal, valid and binding obligation, enforceable against either Party in accordance with its terms, subject to applicable bankruptcy, insolvency, reorganisation, moratorium and similar laws affecting creditors' rights and remedies generally and subject, as to enforceability, to general principles of equity (regardless of whether enforcement is sought in a proceeding at law or in equity).

12.1.6 no claim, litigation, proceeding or governmental investigation is pending or, to the knowledge of either Party, threatened against either Party or their Affiliate that would prevent or delay the execution, delivery or performance of this Agreement.

13 OBLIGATIONS OF THE ENERGY SERVICES PARTNER

13.1 On and from the Acceptance Date of each Managed Site, the Energy Services Partner agrees to provide the Services to such Managed Site and guarantees the uptime levels for all Managed Sites in accordance with the SLA outlined in Schedule 4 (SLA and Penalties) of this Agreement.

13.2 For the avoidance of doubt, the Energy Services Partner shall have no responsibility or liability for any matters (including energy services and/or maintenance) at a Committed Site until that Committed Site becomes a Managed Site for the purposes of this Agreement.

13.3 The Energy Services Partner shall:

13.3.1 perform the Services actively and in good faith, and shall co-operate with other suppliers and service providers of the Customer and the End User to the extent necessary to deliver the Services promptly;

13.3.2 perform the Services with all required skill, care, and due diligence in accordance with the terms of this Agreement;

13.3.3 if and to the extent of any failure to achieve the SLA, provide correct root-cause analysis (primary cause of failure) to the NOC and be responsible for the integrity of the information provided therein.

13.3.4 ensure that its staff are properly trained and where required by the Applicable Law, certified, for the installation, maintenance and troubleshooting relating to the Services;

13.3.5 have proper and complete warehousing facilities and offices in locations determined by it and which are appropriately located to service the Managed Sites;

13.3.6 have proper repair facilities with staff properly trained by various manufacturers of products, to ensure that, as far as reasonably practicable, repairs to the ESP Energy Equipment are effected in Sierra-Leone, to minimise the need for shipping any affected facilities and equipment abroad for repairs;

13.3.7 comply with all Applicable Law and Approvals given in respect of a Managed Site, including the requirement to register relevant agreements, where necessary;

13.3.8 comply with and perform its obligations in accordance with (and procure that any subcontractors also comply with and observe) Good Industry Practice, Performance Standards, safety, health and environment requirements as contained in this Agreement and all Applicable Laws, Customer's vendor code of conduct and to provide all relevant reports required in this regard (including completing all reports required by the Customer for environmental compliance and annual monitoring);

13.3.9 ensure it does not do anything on the Site (beyond the scope of its Services under this Agreement) which may be or become a nuisance to the Customer, or the occupiers of the neighbouring premises or which may negatively impact or affect the Customer or any Tenant or affect any of its Equipment;

13.3.10 not allow access to any Managed Site to any person other than the authorised personnel of the Customer or the Customer's End Users who comply with the agreed access procedures;

13.3.11 not conduct or allow to be conducted upon any Managed Sites, any business operations or activities that are contrary to the purpose for which the Managed Site exists, or employ, generate, manufacture, refine, transport, treat, store, handle, dispose of, transfer, produce or process Hazardous Materials;

13.3.12 immediately notify the Customer and/or the End User in writing if it receives any notice, letter, citation, order, warning, complaint, claim or demand including without limitation any such notice: (i) that the Customer and/or the End User or its End User has violated, or is about to violate any environmental law; (ii) that there has been a release or there is a threat of release of Hazardous Materials at any Managed Site; (iii) that the Customer and/or the End User or its End Users may be or is liable in whole or in part for the costs of cleaning up, remediating, removing or responding to a release of Hazardous Materials; (iv) that any Managed Site is subject to a lien in favour of any Government Authority for any liability, cost or damages under any environmental law; or (v) from a Landlord or other authority or any other notice whatsoever.

13.3.13 use its reasonable endeavours to prevent the release of any Hazardous Material including Fuel spill and ensure proper clean up (where it occurs), and remove and dispose of all Hazardous Materials on, from or affecting a Managed Site; and shall be liable to pay any fine imposed by any environmental agency in accordance with all applicable environmental laws as a result of its breach or default

13.3.14 discuss with the Customer and /or the End User any and all community issues and demands that are brought to the attention of the Energy Services Partner in the areas where Managed Sites are located. The Parties shall discuss such community issues and demands with a view to finding a constructive solution;

13.3.15 not encumber the Sites in any manner or enter into any collocation, infrastructure sharing, lease, tenancy or any other agreement or arrangement in respect of any Managed Site;

13.3.16 notify the Customer as soon as reasonably practicable of any case of Tower malfunctioning, whether via the RMS or manually;

13.4 The Energy Services Partner shall be responsible for the maintenance of the ESP Energy Equipment on all Managed Sites and shall undertake all required repairs and replacements. Any replacement of ESP Energy Equipment will be at the cost of the Energy Services Partner. The Energy Services Partner shall also ensure reliable supply and availability of spare parts in the region of operation.

13.5 Where the Customer discovers any alternative, enhanced or more efficient means of ensuring CAPEX or OPEX reduction, whether in relation to Fuel management, Site optimization or otherwise, it shall notify the Energy Services Partner of same, and the Parties shall conduct good faith discussions with a view to whether amendments to this Agreement are appropriate, provided that no amendment to this Agreement shall be binding unless it is in writing and signed on behalf of both Parties. The Energy Services Partner shall also engage in research on CAPEX and OPEX reduction and management, and shall duly notify the Customer of the findings.

13.6 The Energy Services Partner shall regularly perform and implement quality assurance surveillance and plans to guarantee international standards essential to ensure the integrity of the Services.

13.7 The Energy Services Partner shall be responsible, at its cost, for any defects in its performance of the Services, as well as any related damage, including where such defect causes any damage to any person, or building or disrupts the operational activities at the Managed Sites.

13.8 In providing the Services, the Energy Services Partner shall comply with the access procedures relating to each Managed Site as set out in **Schedule 6** (**Site Access Procedure**) and ensure that operational activities at such Managed Site are not impacted or disrupted in any form whatsoever.

13.9 The Energy Services Partner shall notify the Customer in writing whenever the provision of the Services is reasonably likely or expected to be delayed or disrupted for whatever reason.

13.10 The Energy Services Partner will maintain an RMS on each Managed Site which will provide the single source of power availability data and information as required to evaluate the performance of the energy services. The Energy Services Partner will make available data on Managed Sites in real time to the Customer or Its representatives

13.11 The Customer and/or the End User, its auditors and any Government Authority shall be entitled to monitor the performance of the Energy Services Partner pursuant to the terms of this Agreement. Such monitoring may consist of internal evaluation procedures, re-examination of procedures or any other reasonable procedures. Such monitoring exercises shall be performed in a manner that will not unduly interfere with the performance of the Services under this Agreement.

13.12 The Energy Services Partner shall submit to the Customer a monthly report in respect of the Services. The monthly report must be accurate and contain any relevant information as may be reasonably required by the Customer with regards to the performance of the Services.

13.13 The Energy Services Partner shall attend to any queries, requests for clarification or ambiguities that may be raised by the Customer and/or the End User, any external auditor or Government Authority in relation to any audit report provided by the Energy Services Partner under this Agreement.

13.14 The Energy Services Partner shall assist and support the integration of grid power to supplement the ESP Energy Equipment where available to reduce reliance on Fuel.

13.15 The Energy Services Partner shall provide the Customer with at least **thirty (30) days'** written notice of any Change of Control. The notification shall state all relevant information relating to the Change of Control, including but not limited to the details of the new stakeholders.

13.16 The Energy Services Partner shall have step-in rights in relation to fulfilling any outstanding lease payments on behalf of the Customer **seven (7) days** after notifying the Customer of its intention to act, to avoid disruption to the provision of Services. For the avoidance of doubt, the cost of exercising such a right will be borne by the Customer in addition to an inconvenience fee charged of 5% of the total cost of the exercise.

13.17 The Energy Services Partner shall operate from the NOC. The Customer and/or the End User shall provide access to the Energy Services Partner for all reasonable numbers of personnel and all reasonable equipment and other facilities in order to enable the Energy Services Partner to fully perform its obligations under this Agreement from the NOC. The Customer and/or the End User shall also provide access to the Energy Services Partner to all data reasonably required by the Energy Services Partner to perform the Services, including data in relation to the Telecom Equipment.

13.18 The Energy Services Partner shall make reasonable efforts to minimize direct contact with the local community around the Site. When necessary, such contacts should ideally be conducted by or through the Customer. The Energy Services Partner shall inform the Customer of any significant activities they wish to undertake in fulfilment of this Agreement that may have substantial effects or impacts on the local community. While prior agreement on such effects or impacts is preferred, the Energy Services Partner retains the right to proceed if a timely response from the Customer is not received. The Energy Services Partner shall inform the Customer of any notable actions taken by the local community in response to their work as soon as practicable

14 OBLIGATIONS OF THE CUSTOMER

14.1 The Customer shall make payments in accordance with the provisions of this Agreement, ensuring all payments are made promptly and without undue delay.

14.2 The Customer shall, at each Managed Site and during the performance of this Agreement maintain the Approvals, including but not limited to the necessary land rights, leases and access rights, environmental permits, for the Energy Services Partner to access, use and occupy each Committed Site and each Managed Site for all purposes required for the Services, for no charge to the Energy Services Partner.

14.3 The Customer shall at all times manage all relevant stakeholders including community, local government, regulators, network partners, etc to ensure that Services offered by the Energy Services Partner are not hindered.

14.4 The Customer, in collaboration with the End User, shall promptly provide detailed specifications of the current energy requirements as well as any anticipated increases in energy demand to the Energy Services Partner. Any such increases in energy demand shall necessitate an upward adjustment to the Fees, as required.

14.5 The Customer, in collaboration with the End User, shall be solely responsible for the specification, engineering, procurement, construction, and operation of the Active Equipment. For the avoidance of doubt, all network operations activities are expressly excluded from the scope of the Energy Services Partner.

14.6 The Customer shall provide the Energy Services Partner with timely and relevant information as may be required and requested by the Energy Services Partner, in furtherance of the Energy Services Partner's performance of the Services herein.

14.7 The Customer shall provide all the necessary assistance and cooperation as requested by the Energy Services Partner to aid the timely and efficient discharge of the latter's obligations under this Agreement.

14.8 The Customer shall grant the Energy Service Provider, its agents and sub-contractors an irrevocable, unconditional, non-exclusive licence, easement and such other access rights or rights of passage and easements as may be reasonably required to access the Sites for the provision of the Services.

14.9 The Customer shall provide and maintain the Payment Security throughout the Term of the Agreement and replenish same to the original amount as and when drawn by the Energy Services Partner.

14.10 For the avoidance of doubt, if the Payment Security is not provided before the Effective Date or such other date as the Energy Service Provider may allow in writing, the Energy Service Provider shall have no obligation to proceed with commencing the performance of any of its obligations hereunder.

14.11 On the Energy Services Partner's request, the Customer shall enter into discussions with the relevant network partner(s) to discuss any amendments to the direct agreements between the network partner(s) and the Customers including inter alia an extension to the relevant contract term and other material items identified by the Energy Services Partner on review of such agreement. In the event that the Customer and the network partner(s) cannot reach an agreement which directly or indirectly may affect the provision of the Services by the Energy Services Partner, additional payment security will need to be provided.

14.12 The Customer shall be responsible for selecting and acquiring Sites for the provision of the Services which may be rejected at the discretion of the Energy Services Partner, after inspection and deliberation with the Customer on reasonable grounds such as technical/site suitability, ESG concerns, etc provided that the Customer was unable to satisfactorily address the concerns raised by the Energy Services Partner within **fourteen (14) days** from raising

them. In such instances, the Customer shall procure alternative Sites which have been jointly identified by the Customer, the End User and the Energy Services Partner.

14.13 The Customer must at all times ensure that the lease conditions for all Sites are fulfilled and lease payments are made in a timely manner. In the event that the Customer fails to comply with its obligations under this clause and such failure impacts the accessibility to a Site, any resulting malperformance by the Energy Services Partner and associated loss of revenue shall be borne by the Customer.

14.14 The Customer shall perform all other obligations that are set out in this Agreement to be its obligations.

14.15 The Customer shall provide the Energy Services Partner with at least **thirty (30) days'** written notice of any Change of Control. The notification shall state all relevant information relating to the Change of Control, including but not limited to the details of the new stakeholders.

14.16 The Customer shall comply with and perform its obligations in accordance with all Applicable Laws and the ESP Code of Conduct.

14.17 The Customer shall be responsible for specifying the energy requirements and increase in energy demand provided that any increases in energy demand shall result in an adjustment to the Fees as necessary.

14.18 The Customer shall be responsible for the connection to, maintenance of, and commercial settlement of grid power.

14.19 The Customer shall be responsible for the specification, engineering, procurement, construction, and operations of the network equipment for the Sites.

14.20 The Customer shall be responsible for the payment of any spares required due to damage caused by the Customer, the Customer's authorized representatives, or network partners

14.21 In relation to Site security and safety, the following shall apply:

14.21.1 The Customer shall monitor the deployment, operation and quality of security services on Committed and Managed Sites.

14.21.2 The Customer shall be responsible for the management and cost of security on Sites which shall comply with the reasonable standards prescribed by the Energy Services Partner and/or its insure(s).

14.21.3 The Customer shall conduct regular security and health/safety audits and shall have a schedule for conducting the environmental management plan as provided in **Schedule 7 (Health, Safety Social (Local Community), Security and Environment Requirements),** which shall be available to the Energy Services Partner whenever requested.

15 OBLIGATIONS OF END USER

15.1 The End User shall provide the Energy Services Partner with timely and relevant information as may be required and requested by the Energy Services Partner, in furtherance of the Energy Services Partner's performance of the Services herein.

15.2 The End User shall, at all times, and in collaboration with the Customer maintain the necessary 5G license or any other telecommunications or regulatory licenses, permits, approvals, or no-objection certificates required for the provision of the Services by the Energy Services Partner. This includes obtaining and maintaining all necessary approvals, consents, or no-objection certificates from network partners and relevant authorities

15.3 The End User shall at all times manage all relevant stakeholders including community, local government, regulators, network partners, etc to ensure that Services offered by the Energy Services Partner are not hindered.

15.4 The End User shall provide all the necessary assistance and cooperation as requested by the Energy Services Partner to aid the timely and efficient discharge of the latter's obligations under this Agreement;

15.5 The End User shall grant the Energy Service Provider, its agents and sub-contractors an irrevocable, unconditional, non-exclusive licence, easement and such other access rights or rights of passage and easements as may be reasonably required to access the Sites for the provision of the Services;

15.6 On the Energy Services Partner's request, the End User shall enter into discussions with the relevant network partner(s) to discuss any amendments to the direct agreements between the network partner(s) and the End User including inter alia, an extension to the relevant contract term and other material items identified by the Energy Services Partner on review of such agreement. In the event that the End User and the network partner(s) cannot reach an agreement which directly or indirectly may affect the provision of the Services by the Energy Services Partner, additional payment security will need to be provided.

15.7 The End User shall ensure that there is no movement, relocation or alteration of the Equipment except as provided under this Agreement.

15.8 The End User shall perform all other obligations that are set out in this Agreement to be its obligations.

15.9 The End User shall provide the Energy Services Partner with at least **thirty (30) days'** written notice of any Change of Control. The notification shall state all relevant information relating to the Change of Control, including but not limited to the details of the new stakeholders.

15.10 The End User shall comply with and perform its obligations in accordance with all Applicable Laws and the ESP Code of Conduct.

16 BENEFICIARIES

16.1 This Agreement shall subsist to the benefit of the Parties and their successors-in-title, Affiliates, and assigns.

16.2 Nothing contained in this Agreement shall give or allow any claim or right of action whatsoever by any third party. It is the express intention of the Parties that any such party or entity other than as referred to in Clause 16.1 above receiving the benefits under this Agreement shall be deemed an incidental beneficiary only and as such, no person who is not a party to this Agreement (nor contemplated in Clause 16.1) shall have any right to enforce any term of this Agreement.

17 RELATIONSHIP OF THE PARTIES

The Parties hereby acknowledge that they are entering into this Agreement as distinct and independent entities. The Energy Services Partner agrees to furnish the Services in the capacity of an independent contractor and not in the capacity of an employee or agent of the Customer or the End User. Neither Party nor any of its agents or employees, shall be considered agents or employees of the other Party. This Agreement does not establish, nor shall it be construed as establishing, any association, joint venture, partnership, or agency between the Parties, nor does it impose any partnership obligations or liabilities on either Party. Neither Party is authorized, explicitly or implicitly, to bind the other Party to any agreement, liability, or understanding, except as expressly stated in this Agreement. Each Party bears sole responsibility for the actions of itself, its employees, personnel, representatives, agents, and subcontractors.

18 SERVICE LEVEL AGREEMENT AND ESCALATION OF MAINTENANCE SERVICES

18.1 The Energy Services Partner shall perform the Services in accordance with the service levels specified under Schedule 4 (SLA and Penalties**)** of this Agreement.

18.2 Any breach of the service levels shall be subject to the application of the Penalties under Schedule 4 **(**SLA and Penalties) of this Agreement.

18.3 The maximum liability of the Energy Services Partner in any month for Penalties shall be limited to **fifteen percent (15%)** of the annual Services Fees payable in respect of the entire Managed Sites under the management of the Energy Services Partner for that month. ("**Penalties Cap**").

18.4 The Customer must claim any Penalties due by no later than one (1) year from the end of the month to which the Penalties relate.

19 INSURANCE

19.1 The Energy Services Partner shall maintain as applicable adequate and proper insurance cover with a reputable insurer throughout the term as follows:

19.1.1 General or Public Liability with a coverage value of Two Million Five Hundred Thousand US dollars (US$2,500,000);

19.1.2 any other insurance that may be required by Applicable Law.

19.2 The Customer Insurance

19.2.1 The Customer shall provide insurance cover for the equipment owned by the Customer on a Managed Site.

19.2.2 Operational All Risk Insurance with a coverage value of Two Hundred and Forty US dollars (US$240,000.00).

19.3 End User Insurance

19.3.1 The End User shall provide insurance cover for the equipment owned by End User on a Managed Site.

19.3.2 Operational All Risk Insurance with a coverage value of Two Hundred and Forty Thousand US dollars (US$ 240,000.00).

20 PAYMENT OF TAXES

20.1 Each Party shall be responsible for paying, as and when due, all Taxes, duties, levies and/or Fees applicable to it and as may be required by Applicable Laws in relation to the Agreement.

20.2 The Fees or considerations under this Agreement shall be exclusive of Tax but subject to deduction of WHT at the applicable statutory rates.

21 EMPLOYEES AND LABOUR

21.1 The Energy Services Partner shall employ an adequate number of qualified, skilled, and experienced personnel with requisite training and skills to provide the Services.

21.2 The Energy Services Partner shall ensure that its employees shall at all times while providing the Services, adhere to the Customer's and/or the End User's safety and other policies as well as environmental management plans as communicated to the Energy Services Partner in accordance with this Agreement, and the Applicable Laws.

21.3 The Energy Services Partner shall comply with all statutory requirements of employment and labour under Applicable Laws, with respect to all the Energy Services Partner's employees or workmen, contractors, consultants, and agents. Such requirements include, without limitation, obligations relating to minimum wage, hygienic working conditions, leave, medical and life insurance, provident fund, and pension fund as applicable, according to Applicable Laws.

22 ANTI-BRIBERY & ANTI-CORRUPTION

22.1 The Parties each represent that they have not and shall not engage in any activity or conduct that will result in a violation of:

22.1.1 any Anti-Corruption Laws;

22.1.2 any Sanctions; and

22.1.3 any applicable laws or regulations against Objectionable Practices.

22.2 Unless such disclosure would constitute a breach of any Applicable Law, each Party shall supply to the other Party:

22.2.1 promptly upon becoming aware of them, the details of any actual or potential violation of or in relation to any Anti-Corruption Laws, Sanctions or Objectionable Practice, or of any investigation or proceedings relating to the same;

22.2.2 copies of any correspondence delivered to, or received from, any regulatory authorities in relation to any matter referred to in clause 22.2.1 above at the same time as they are dispatched or promptly upon receipt (as the case may be); and

22.2.3 promptly upon request by the other Party, such further information relating to any matter referred to in clauses 22.2.1 and 22.2.2 above as the other Party may reasonably require.

23 TRADE LAWS, ANTI-TERRORISM AND ANTI-MONEY LAUNDERING

23.1 Each Party hereby represents, warrants, and undertakes to the other that neither it nor any of its directors, officers, employees, Affiliates or any third party retained by and/or representing it:

23.1.1 is the government of, resident in, located in, organized under the laws of, or subject to the jurisdiction of, any country or territory that is, or whose government is, the target of comprehensive economic or trade sanctions or restrictive measures under Applicable Laws, presently including the Crimea, Donetsk and Luhansk regions of Ukraine, Cuba, Iran, North Korea, Syria, and the Government of Venezuela;

23.1.2 is designated on any sanctions list promulgated, administered, or enforced under Applicable Laws, including but not limited to, the U.S. Treasury Department’s Specially Designated Nationals and Blocked Persons List;

23.1.3 is owned or controlled directly or indirectly by any party described in clause (a) or (b);

23.1.4 is subject to a Denial Order by the U.S. Department of Commerce, Bureau of Industry and Security; or

23.1.5 is subject to any other restrictions that would preclude it from dealing with the other Party.

23.2 Each Party hereby agrees that:

23.2.1 it shall not (neither shall any of its directors, employees, or agents) directly or indirectly engage in, promote, or assist and/or facilitate any form of terrorist group or person who engages in or promotes or supports, any form of terrorist activity whatsoever;

23.2.2 it shall ensure that it complies with anti-money laundering and anti-terrorism laws, laws and regulations on sanctions or embargoes, restricted party lists trade controls on the import, export, re-export, transfer or otherwise trade of goods, services, software, or technology, including those of any jurisdiction in which the Customer and/or the End User receives the Services, goods and/or services, or where each Party or its Affiliate(s) operates, including, but not limited to, the European Union, the United Kingdom and the United States of America and other Applicable Laws. Each Party further confirms that it has in place and undertakes to maintain sufficient internal structures and processes to ensure such compliance and to track, prevent and detect the violations of these laws;

23.2.3 it shall ensure that none of its directors or officers has been the subject of an investigation, settlement or conviction for applicable anti-money laundering and anti-terrorism, sanctions and export controls laws and regulations; and

23.2.4 it shall immediately upon discovery or reasonable suspicion, send to the other Party, a written notification of any incident or suspicion of its involvement or the involvement of its directors, officers, employees, Affiliates, or any third party retained by it/representing it in a violation of applicable anti-money laundering and anti-terrorism, sanctions and export control laws and regulations in connection with the Services or performance of its obligations under this Agreement.

23.3 Each Party confirms that it shall, if any of the Site(s), Tower operation, Services, goods and/or services provided hereunder by either Party requires a license, permit, or other authorization from any sanctions or export controls governmental or regulatory authority, prior to the direct or indirect provision of the Services, goods and/or services to End User:

23.3.1 apply for and secure all necessary licenses, permits, or other authorizations from the relevant Trade Authority to allow the export, re-export, transfer, disclosure, or other release or provision of the Services or goods/services to or for the benefit of End User;

23.3.2 provide written notice to End User of any end-user, end-use, or other applicable conditions issued by a Trade Authority as part of any necessary license, permit or other authorization received from a Trade Authority; and

23.3.3 provide written notice to the other Party to identify all items subject to a license, permit, or other authorization.

24 ESG REQUIREMENTS

24.1 Each Party shall:

24.1.1 use reasonable efforts to observe and comply with the ESG Laws and ESG Standards;

24.1.2 take all reasonable steps in anticipation of changes to the ESG Laws and ESG Standards to ensure ongoing compliance; and

24.1.3 respond reasonably diligently to any reasonable requests for information from the other Party in relation to demonstrating compliance with (i) and (ii). Such request(s) may include information that is:

24.1.3.1 publicly available or is likely to become publicly available regarding an ESG Incident; or

24.1.3.2 related to the resolution or remedy of ESG Incidents known or identified prior to the Effective Date of this Agreement.

24.2 Notification and rectification

24.2.1 If either Party experiences an ESG Incident, or has breached, or is reasonably likely to breach, any ESG Laws or ESG Standards that Party shall:

24.2.2 within **48 (forty-eight) hours** of such event, breach or awareness, notify the other Party, providing:

24.2.2.1 details of the relevant event, incident or circumstance;

24.2.2.2 If the event, breach or incident is capable of remedy: the proposed approach and reasonable timeline to remedy the same; and/or

24.2.2.3 the actions the Party will implement to mitigate the impact of the incident and to avoid the recurrence of future similar events;

24.2.3 carry out such remedy or actions within **20 (twenty) Business Days** or such alternative period as may be agreed by the Parties, taking into account the nature of the event, incident or circumstance.

24.3 Additional ESG Considerations

24.3.1 The Customer shall ensure that any land acquisition will comply with IFC Performance Standards including IFC PS 5, and The ESP's Land Acquisition Policy referenced in Schedule 7.

24.3.2 The parties shall maintain continuous communication to ensure compliance with all ESG requirements.

24.3.3 The Customer and the End User agree to implement and uphold ESG standards, and EIA requirements conducted in line with local and IFC PS. The Customer and the End User shall either designate an internal representative or appoint an external Environmental and Social (E&S) representative to oversee the EIA implementation and collaborate with the Energy Services Partner's ESG representative. The designated representative shall ensure regular updates are provided and participate in meetings to address ESG issues and enhance performance.

25 ASSIGNMENT AND SUBCONTRACTING

25.1 Assignment

25.1.1 Neither Party may assign the whole or any part of this Agreement or any benefit or interest in or under this Agreement, without the prior written consent of the other Party, such consent not to be unreasonably withheld or delayed except that the Energy Services Partner shall be freely entitled, without the Customer's or the End User' consent to:

25.1.1.1 assign by way of security, charge or otherwise encumber its interest under this Agreement or any rights or benefit under this Agreement in favour of any finance parties providing financing or refinancing in connection with its provision of the Services. Any such assignment, charge or encumbrance shall include the right to make second or subsequent assignments, and charges in order to perfect or enforce such assignment or charge; and

25.1.1.2 assign the benefit of this Agreement in accordance with a direct agreement or to one of its Affiliates.

25.2 Subcontracting

25.2.1 The duties and obligations of the Energy Services Partner arising hereunder may be subcontracted without prior notice to, or consent of, the Customer or the End User to any subcontract or subcontractor that is listed in Schedule 11 (List of Approved Subcontractors). The Energy Services Partner may subcontract to any subcontractor not listed in Schedule 11 (List of Approved Subcontractors) with prior written notice to the Customer.

25.2.2 The Energy Services Partner shall be responsible for all subcontracting arrangements and provision of the Services and any related services agreed by the Parties under this Agreement.

25.2.3 The Energy Services Partner shall be responsible for the acts, omissions and performance of any subcontractor.

25.2.4 The Energy Services Partner agrees that any subcontract it enters into in relation to or in respect of the performance of this Agreement shall include a provision that the subcontractor shall abide by the terms and conditions hereof, as well as all other Applicable Laws that have been or may hereafter be established. Furthermore, the Energy Services Partner agrees that all subcontracts shall include a provision that the subcontractors shall indemnify and hold the Customer harmless from all Liabilities resulting from the provision of the Services under this Agreement.

25.3 Each Party shall, from time to time and upon reasonable request from the other Party, do or procure the doing of all reasonable and lawful acts and/or execute or procure the execution of all documents reasonable necessary to give full effect to any assignment, delegation or subcontract pursuant to receiving the necessary approval as may be required under this **Clause 25**, including executing any document in a form reasonably requested by the other Party in order to confirm and/or give effect to such assignment, transfer or subcontract.

26 FORCE MAJEURE

26.1 Notice of Force Majeure Event

26.1.1 As soon as practicable and in any case, within **seven (7) days** from the date of the occurrence of a Force Majeure Event, or the date of knowledge thereof, or as soon as reasonably practicable after the resumption of any means of providing notice between the Parties, the Affected Party shall notify the other Party in writing of such Force Majeure Event.

26.1.2 The Affected Party shall give the other Party, a second notice in writing, not later than **twenty-eight (28) days** after the initial notice given under **Clause 26.1.1** above, setting out *inter alia*, the following in reasonable detail, and to the extent that can be reasonably determined at the time of the second notice:

26.1.2.1 the extent of the Force Majeure Event;

26.1.2.2 the estimated Force Majeure period;

26.1.2.3 the nature of and the extent to which performance of any of its obligations under this Agreement are affected by the Force Majeure Events;

26.1.2.4 the measures which the Affected Party has taken or proposes to take to alleviate / mitigate the impact of the Force Majeure Event and to resume the performance of its obligations thereby affected; and

26.1.2.5 any other relevant information concerning the Force Majeure Event, and/or the rights and obligations of the Parties under this Agreement.

26.2 Performance of Obligations

If an Affected Party is rendered wholly or partially unable to perform any of its obligations under this Agreement due to a Force Majeure Event, it shall be excused from the performance of such obligations to the extent that it is unable to perform same on account of such Force Majeure Event, provided that:

26.2.1 due notice of the Force Majeure Event has been given to the other Party as required under this Agreement.

26.2.2 the excuse from performance shall be of no greater scope and of no longer duration than is necessitated by the Force Majeure Event.

26.2.3 the Affected Party has taken all reasonable efforts to mitigate or limit any damage that may be caused or is likely to be caused in relation the performance of its obligations under this Agreement as a result of the Force Majeure Event.

26.2.4 when the Affected Party is able to resume the performance of its obligations under this Agreement, it shall give to written notice to that effect to the other Party and shall promptly resume the performance of its obligations.

26.2.5 the Affected Party shall continue to perform its obligations which are not affected by the Force Majeure Event and which are capable of being performed in accordance with the provisions of this Agreement.

26.3 Withdrawal of Sites for Force Majeure

26.3.1 Where the Affected Party is the Energy Services Partner and the performance of some or all Services at a Managed Site is excused by a Force Majeure Event (such services hereinafter referred to as the "**Affected Services**" and such Managed Site hereinafter referred to as an "**Affected Site**"):

26.3.1.1 the Fees applicable to such Affected Site shall be reduced to an amount that (a) takes into account that the Energy Services Partner is excused from performance of the Affected Services, and (b) enables the Energy Services Partner to continue to repay capital expenditure incurred in relation to all equipment impacted by the Affected Services; and/or

26.3.1.2 the Term of this Agreement in respect of the Affected Sites or all Managed Sites shall be extended by the same number of days as the duration of the relevant Force Majeure Event.

26.3.2 The Parties hereby agree that where a Force Majeure Event persists and there continue to be Affected Services at an Affected Site for a continuous period of **one hundred and eighty (180) days** or more, the other Party shall have the right to withdraw the Affected Site from the scope of this Agreement immediately, by issuing a Withdrawal Notice.

26.3.3 Without prejudice to any other rights or remedies that a Party may have against the other Party under this Agreement, at law or in equity, upon withdrawal of a Withdrawn Site pursuant to **Clause 26.3.2** above, the Customer shall pay to the Energy Services Partner, in return for the transfer of title in the ESP Energy Equipment at the Withdrawn Site, the Exit Amount in respect of that Withdrawn Site, less the total cost of remedial work evaluated under **Clause 33.45**.

26.4 Termination of Agreement for Force Majeure

26.4.1 The Parties hereby agree that where a Force Majeure Event persists and an Affected Party is unable to perform substantially all of its obligations under this Agreement for a continuous period of **one hundred and eighty (180) days** or more, the other Party shall have the right to terminate the Agreement immediately, by giving written notice of such termination.

26.4.2 Without prejudice to any other rights or remedies that a Party may have against the other Party under this Agreement, at law or in equity, upon termination of this Agreement, the Customer shall pay to the Energy Services Partner, in return for the transfer of title in the ESP Energy Equipment, the Exit Amount in respect of all Managed Sites, less the total cost of remedial work evaluated under **Clause 33.4**.

27 DISPUTE RESOLUTION

27.1 Negotiations

27.1.1 In the event of any dispute, controversy or claim between the Parties, arising out of or in connection with this Agreement, including any question regarding its existence, termination, validity or any breach thereof ("**Dispute**"), either Party may notify the other Party of the Dispute by way of a written notice, which shall identify the Dispute and contain sufficient information to enable the other Party to understand the nature of the Dispute.

27.1.2 Except as otherwise provided in this Agreement, within **ten (10) Business Days** of the date of provision of such notice of Dispute, the Parties shall attempt to resolve such Dispute in good faith through negotiation between the representatives of each Party, and these representatives shall have the necessary authority to make binding decisions. If such individuals are unable to reach an agreement within such Business Days, or over a longer period, if the Parties have so agreed, either Party may refer the Dispute to arbitration in accordance with Clause 27.2.

27.2 Arbitration

27.2.1 Any Dispute arising out of or in connection with this Agreement that has not been resolved following the procedures set forth in Clauses 27.1 shall be referred to arbitration.

27.2.2 The Parties hereby consent to submit any Dispute for settlement by arbitration pursuant to the rules of arbitration in accordance with the rules of International Chamber of Commerce International Court of Arbitration (ICC). If the Parties fail to select an arbitrator within **ten (10) Business Days** of the matter being referred to arbitration, ICC shall select the arbitrator.

27.2.3 The seat and place of arbitration shall be London, England. The Parties may, on agreement, select an alternative place for the Arbitration.

27.2.4 The language of the arbitration shall be English.

27.2.5 The Parties and the arbitrator will keep confidential and not use for any collateral or other purpose not related to the resolution of the Dispute the subject matter of the arbitration and all information (whether given orally, in writing or otherwise) produced for, or arising in relation to, the arbitration, including any award arising out of it, except insofar as is necessary to implement and enforce any award or otherwise as required by Law.

27.2.6 If there is any conflict between this Agreement and the ICC Rules, this Agreement shall prevail.

27.2.7 The arbitrator's award shall be final and binding upon the Parties and (to the fullest extent permitted by the Applicable Law) the Parties waive their right to any form of appeal or to other similar recourse to a competent court of law in England or any other jurisdiction. The Parties further undertake to carry out without delay the provisions of any arbitration award or decision, and each agrees that any such award or decision may be enforced by any court or tribunal having jurisdiction.

27.2.8 The arbitrator shall have the right and authority to decide on the costs of arbitration.

27.2.9 Nothing in this Clause 27.2 shall preclude the Parties from seeking injunctive relief from a court of competent jurisdiction.

28 GOVERNING LAW

This Agreement shall be governed by, interpreted under, and construed in accordance with the laws of England and Wales, without regard to principles of conflict of laws.

29 APPLICABLE LAW & APPROVALS

29.1 Both Parties are obligated to adhere to all relevant laws and approvals pertaining to the content of this Agreement and the responsibilities arising from it. Additionally, each Party must ensure that subcontractors also comply with the relevant laws and approvals.

29.2 Each Party shall indemnify the other Party against all Claims arising from the failure of the first Party (a) to comply with any Applicable Law and/or any Approval, and/or (b) to obtain any Approval that it is obliged to obtain under this Agreement as outlined in **Schedule 12 (Approvals)**. For the purposes of this Clause 29.2, a “Claim” may include the Energy Services Partner’s loss of revenue and any costs relating to any decommissioning that results from the indemnifying Party’s failure, and any exclusion of liability for Consequential Loss in this Agreement (including Clause 37.1 (Consequential Loss)) shall not apply.

29.3 Each Party shall obtain and renew, during the entire Term of this Agreement, all the Approvals set out in Schedule 12 (**Approvals**) to be the responsibility of that Party. If and to the extent that any Approval that is not set out in Schedule 12 (**Approvals**) is required to be obtained in order to enable the Services to be carried out at each Committed Site, the Customer and/or the End User shall be responsible for obtaining such Approval at its cost and in a timely manner, including in the name of the Energy Services Partner if applicable. The Energy Services Partner may at its discretion refuse to perform any Services at or in relation to a Committed Site in respect of which the Customer and/or the End User had failed to obtain any Approval that is the responsibility of End User under this Agreement, and the Energy Services Partner shall be relieved of all relevant obligations until a reasonable period after the Customer and /or the End User has obtained the Approval(s) in question.

29.4 Each Party shall provide the other Party, if the latter so requests, with any information, evidence and assistance reasonably required for obtaining and maintaining the Approvals for which the other Party is responsible.

30 FUEL ADMINISTRATION

30.1 The Energy Services Partner directly or indirectly shall source the Fuel, and deliver same to the Managed Sites. The procedures and guidelines applicable with respect to Fuel administration are set out in **Schedule 1** (**Scope of Work and Services**).

30.2 The Energy Services Partner shall deliver **one hundred percent (100%)** of the approved Fuel allocation to the relevant Site.

30.3 Sharing of Risk in respect of Fuel Theft

The Customer and /or the End User agrees to replenish any Fuel losses incurred as a result of theft that is deemed to be beyond the scope of reasonably anticipated theft in the specific region or area, as applicable, up to the Allocation Target, free of charge to the Energy Services Partner. The Energy Services Partner shall implement commercially reasonable protocols, processes and procedures to mitigate against Fuel theft.

31 CONFIDENTIALITY

31.1 The Parties will not disclose to any third party (excluding as permitted pursuant to this Clause 31):

31.1.1 the details of this Agreement and the information handed over to the other Party during the course of negotiations, as well as the details of the transactions contemplated in this Agreement; and

31.1.2 all information relating to the business or the operations and affairs of the Parties,

(together "**Confidential Information"**), without the prior written consent of the other Party.

31.2 Provided that each Party may disclose such Confidential Information:

31.2.1 to its employees, officers, representatives, advisers, agents or subcontractors who:

31.2.1.1 need to know such Confidential Information for the purposes of carrying out such Party's obligations under this Agreement;

31.2.1.2 are aware that the Confidential Information should be kept confidential;

31.2.1.3 are aware of the disclosing Party's undertaking in relation to such information in terms of this Agreement;

31.2.1.4 have been directed by the disclosing Party to keep the Confidential Information confidential and have undertaken to keep the Confidential Information confidential; and

31.2.2 to lenders or prospective lenders of the project.

31.3 Each Party shall ensure that its employees, officers, representatives, advisers, agents or subcontractors to whom it discloses such information comply with this Clause 31.

31.4 The obligations of non-disclosure under this Agreement do not extend to information that:

31.4.1 is disclosed to a receiving Party in terms of this Agreement but at the time of such disclosure, such information is in the lawful possession or control of that Party and not subject to an obligation of confidentiality;

31.4.2 is or becomes public knowledge, otherwise than pursuant to a breach of this Agreement by the Party who disclosed such Confidential Information; and

31.4.3 is required by the provisions of any law, or regulation, or during any proceedings, the Party required to make the disclosure has taken all reasonable steps to oppose or prevent the disclosure and has consulted with the other Party prior to making such disclosure.

32 INDEMNIFICATION

32.1 The Energy Services Partner shall indemnify and hold harmless and non-liable the Customer and the End User and its agents, officers and employees from and against any and all claims,

demands, actions, losses, damages, assessments, charges, liabilities, costs and expenses (including but not limited to legal fees and disbursements, penalties and interest) (together, "**Liabilities**") in respect of theft, loss or damage to or destruction of tangible property, or personal injury, sickness or death caused by or arising out of any act or omission of the Energy Services Partner, its personnel or any of its agents, representatives or subcontractors in the course of providing the Services; unless attributable to any fraud, gross negligence, wilful misconduct or breach of this Agreement by the Customer and the End User, its employees, officers or agents.

32.2 The Customer and the End User shall indemnify and hold harmless and non-liable, the Energy Services Partner and its agents, officers and employees from and against all Liabilities in respect of theft, loss or damage to or destruction of tangible property, or personal injury, sickness or death caused by or arising out of any act or omission of the Customer and the End User, its personnel or any of its agents, representatives or subcontractors; unless attributable to any fraud, gross negligence, wilful misconduct or breach of this Agreement by the Energy Services Partner, its employees, officers or agents.

32.3 The Party who is the beneficiary of any indemnity set out in this Agreement (the "**Indemnified Party**") shall notify the other Party (the "**Indemnifying Party**") of any proceeding, claim or demand in respect of which indemnification may be sought pursuant to Clause 32.1 or 32.2 (as applicable), and shall promptly provide the Indemnifying Party with a copy of any applicable summons, complaint or other notice of claim relevant thereto, provided that the failure of an Indemnified Party to notify the Indemnifying Party shall not relieve the Indemnifying Party from any liability that it may have under this Clause 32, except to the extent that the Indemnifying Party has been materially prejudiced (through the forfeiture of substantive rights or defences) by such failure, and provided further that the failure to notify the Indemnifying Party shall not relieve such Party from any other liability that it may have to the Indemnified Party otherwise than under this Clause 32.3.

32.4 Following any such claims mentioned above, the Indemnified Party shall at its discretion, be entitled to either defend such claims or request the Indemnifying Party to assume such defence (in which case the Indemnifying Party shall be obliged to assume such defence within **ten (10) days** following any such notice by the Indemnified Party). For the avoidance of doubt, any such defence (including all related Liabilities) shall be at the Indemnifying Party's expense and covered by the indemnity referred to in Clause 32.1 or 32.2 (as applicable). The Indemnifying Party shall take all actions reasonably necessary to protect the Indemnified Party from such claims. In the event that the Indemnifying Party fails or refuses to undertake such defence, the Indemnified Party may but shall not be obligated to assume its own defence, and thereafter recover the costs of such defence and any Liabilities thereof from the Indemnifying Party.

33 WITHDRAWAL OF SITES AND TERMINATION

33.1 Withdrawal of Site for ESP Default

The Customer shall be entitled to withdraw a Managed Site from the scope of this Agreement by issuing a written notice to the Energy Services Partner:

33.1.1 if the Energy Services Partner becomes liable for Phase Delay Damages above the Phase Delay Damages Cap, in which case the Customer shall be entitled to withdraw the Committed Sites in the relevant Phase that have not achieved their Acceptance Date by the relevant Scheduled Phase Completion Date;

33.1.2 provided that the Customer has given the Energy Services Partner the opportunity to carry out an investigation into the relevant failure(s), if the Energy Services Partner becomes liable for Penalties above the Penalties Cap in **four (4) consecutive months**; in which case the Customer shall be entitled to withdraw any Managed Sites that have underperformed for all four (4) such consecutive months

33.1.3 if the Energy Services Partner commits a material breach of its obligations under this Agreement affecting a given Managed Site only and if the breach is capable of remedy, fails to remedy the breach within **thirty (30) days** of receiving notice to do so (or where the breach is not reasonably capable of remedy within **thirty (30) days**, fails to remedy the breach within a reasonable period having regard to the nature of the breach),

and following such Withdrawal Notice, the provisions of **Clause 33.6** shall apply.

33.1.4 The Parties agree that the withdrawal of a Site pursuant to this clause shall not prevent the Energy Services Partner from providing the Services in respect of the other Managed Sites within the same Phase as the Withdrawn Site or the other Phases unless such Managed Site(s) also become subject to a Withdrawal Notice.

33.2 Termination for ESP Default

33.2.1 The Customer or the End User shall be entitled to terminate this Agreement or any part thereof by written notice to the Energy Services Partner (a "**Termination Notice**"):

33.2.1.1 if the Energy Services Partner commits a material breach of its obligations under this Agreement affecting all of the Managed Sites, or fails to provide the Services at 98% availability for over 25% of total Managed sites for **three (3)** consecutive months (excluding the first six months after Acceptance Date for each site) as calculated and adjusted for Exemptions in accordance with Schedule 4 (SLA and Penalties), and if the breach is capable of remedy, fails to remedy the breach within **thirty (30) days** of receiving notice to do so (or where the breach is not reasonably capable of remedy within **thirty (30) days**, fails to remedy the breach within a reasonable period having regard to the nature of the breach);

33.2.1.2 in the event that the Energy Services Partner becomes insolvent or unable to pay its debts when they become due or if any corporate action, legal proceedings or other procedure or step is taken or notice is given in relation to a moratorium of any indebtedness, a suspension of payments, winding-up, dissolution, administration or reorganization (by way of voluntary arrangement, scheme of arrangement or otherwise) of, or the appointment of an administrator in respect of the Energy Services Partner or if the Energy Services Partner enters into a composition, assignment or arrangement with any of its creditors or upon the appointment of a provisional liquidator, a liquidator, receiver, receiver or manager, administrative receiver, administrator, compulsory or interim manager or other similar officer in respect of the Energy Services Partner or any of its assets or any analogous procedure or step is taken in any jurisdiction with respect to the Energy Services Partner;

33.2.1.3 if the Energy Services Partner commits fraud, gross negligence and/or wilful misconduct in relation to the arrangements contemplated by this Agreement;

33.2.1.4 if the Energy Services Partner breaches Clauses 222 or Clause 233

(each an "**ESP Default**").

33.2.2 The Customer or the End User shall not be entitled to terminate this Agreement due to a breach by the Energy Services Partner of the service levels specified under **Schedule 4 (SLA and Penalties)**. The remedy shall be as set out in Clause 188.

33.2.3 The Customer or the End User shall not be entitled to terminate this Agreement due to a Phase Delay Damages Cap being reached. The remedy shall be as set out in Clause 3333.1.

33.3 Termination for the Customer and/or the End User's Default

The Energy Services Partner shall be entitled to terminate this Agreement or any part thereof by written notice to the Customer and/or the End User (a "**Termination Notice**"):

33.3.1 if the Customer and/or the End User commits a material breach of its obligations under this Agreement and if the breach is capable of remedy, fails to remedy the breach within **thirty (30) days** of receiving notice to do so;

33.3.2 in the event that the Customer and/or the End User becomes insolvent or unable to pay its debts when they become due or if any corporate action, legal proceedings or other procedure or step is taken or notice is given in relation to a moratorium of any indebtedness, a suspension of payments, winding-up, dissolution, administration or reorganization (by way of voluntary arrangement, scheme of arrangement or otherwise) of, or the appointment of an administrator in respect of the Customer and/or the End User or if the Customer and/or the End User enters into a composition, assignment or arrangement with any of its creditors or upon the appointment of a provisional liquidator, a liquidator, receiver, receiver or manager, administrative receiver, administrator, compulsory or interim manager or other similar officer in respect of the Customer and/or the End User or any of its assets or any analogous procedure or step is taken in any jurisdiction with respect to the Energy Services Partner;

33.3.3 where a Change of Control of the Customer and/or the End User will be inimical to the business or interest of the Energy Services Partner;

33.3.4 if the Customer and/or the End User commits fraud, gross negligence and/or wilful misconduct in relation to the arrangements contemplated by this Agreement;

33.3.5 if the Customer and/or the End User does or omits to do anything which, has a material adverse effect on the reputation of the Energy Services Partner or its other End Users and if the breach is capable of remedy, fails to remedy the breach within **thirty (30) days** of receiving notice to do so;

33.3.6 if the Customer and/or the End User breaches the ESP Code of Conduct, and if the breach is capable of remedy, fails to remedy the breach within **thirty (30) days** of receiving notice to do so (or where the breach is not reasonably capable of remedy within **thirty (30) days**, fails to remedy the breach within a reasonable period having regard to the nature of the breach);

33.3.7 if the Customer and/or the End User breaches Clauses 22 or 23

(each a "**Customer Default and/ or End User Default**").

33.4 Termination for Convenience

33.4.1 The Customer shall, after the expiry of the fifth anniversary of the last Acceptance Date, have the right to terminate this Agreement for convenience or without cause by giving the Energy Services Partner at least 6 months' prior written notice. If notice is so given, this Agreement shall terminate upon the expiration of the specified period and the Customer shall be required to pay the Exit Amount in respect of all Managed Sites, less the total cost of remedial work evaluated under **Clause 33.5** .

33.5 Evaluation of ESP Energy Equipment upon Withdrawal or Termination

33.5.1 As soon as reasonably practicable after the issuance of a Withdrawal Notice or a Termination Notice, the Energy Services Partner shall evaluate the condition of all ESP Energy Equipment at the relevant Withdrawn Site or all Managed Sites (as the case may be). Such evaluation shall assess:

33.5.1.1 whether the ESP Energy Equipment is in reasonable condition in light of normal wear and tear;

33.5.1.2 whether the ESP Energy Equipment is unreasonably degraded and would require remedial work in order to be in reasonable condition in light of normal wear and tear; and/or

33.5.1.3 the nature and reasonable cost of such remedial work.

33.5.2 The Energy Services Partner shall submit such evaluation to the Customer. The Customer shall review such evaluation and respond within **twenty-eight (28) days** with approval, or comments on such list. The Energy Services Partner shall consider any comments, make any reasonable adjustments to the proposed evaluation, and re-submit to the Customer. The evaluation shall be deemed to be agreed between the Parties if (a) approved by the Customer or (b) the Customer fails to make any comments within the **twenty-eight (28)-day** period above, or (c) after re-submission of such evaluation by the Energy Services Partner as set out above.

33.6 Consequences of a Withdrawn Site

33.6.1 Subject to Clause 33.6.2, in respect of a Withdrawn Site, the Customer shall in return for the transfer of title in the ESP Energy Equipment, pay the Exit Amount in respect of such Withdrawn Site, less the total cost of remedial work evaluated under Clause 33.45 detailed in Schedule 13 ("Exit Amount").

33.6.2 Clause 33.6.1 shall not apply where a Site becomes a Withdrawn Site as a result of the circumstances set out in Clause 33.1.1 or Clause 33.1.2. In such circumstances, Clause 33.45 shall not apply and the Energy Services Partner shall vacate such Withdrawn Site and decommission, remove and retain all ESP Energy Equipment located on such Withdrawn Site and there shall be no transfer of title in the ESP Energy Equipment to the Customer.

33.7 Consequences of Termination for ESP Default

33.7.1 The Customer or the End User shall have the option to call on the Energy Services Partner to transfer the ESP Energy Equipment to the Customer upon payment to the Energy Services partner of Exit Amount B set out in Table 1, Schedule 11 ("**Exit Amount**").

33.7.2 If the Customer and the End User do not elect to transfer of the ESP Equipment as set out in Clause 02, the Energy Services Partner shall decommission and remove all ESP Energy Equipment from the Site within a reasonable period.

33.8 Consequences of Termination for the Customer and/or the End User Default

33.8.1 If the Energy Services Partner terminates this Agreement in accordance with Clause 33.3, the Customer and/ or the End User shall pay the Exit Amount in respect of all Managed Sites, in return for the transfer of title in the ESP Energy Equipment.

33.9 Other Consequences of Termination

Upon any Termination of this Agreement, the liability of the Energy Services Partner for further provision of the Services shall thereupon cease, but the Parties shall not be released from the duty to perform any obligations that accrued prior to Termination, and Termination shall not affect a Party's accrued rights and obligation prior to Termination.

34 LENDER STEP-IN RIGHTS

34.1 The Customer and End User acknowledge that the Energy Services Partner may engage third-party lenders to finance the project. In the event of a material default by the Energy Services Partner under this Agreement, such lenders, where applicable, shall have the right to cure the default or exercise step-in rights, assuming the Energy Services Partner's obligations under this Agreement to prevent termination. The Customer and End User agree to grant the lenders a reasonable cure period and to cooperate in good faith with them to ensure the continued performance of the Agreement.

35 CHANGE IN LAW

35.1 Notice for Change in Law

35.1.1 If a Change in Law occurs, either Party shall give the other prompt written notice, without intentional delay, describing the particulars of the Change in Law, a general description of the obligations likely to be affected and a statement of the actions to be taken in order to comply with that Party's obligations under this Agreement.

35.1.2 Each Party shall use all reasonable endeavours to minimise and mitigate the effects of any Change in Law.

35.2 Consequence of Change in Law

35.2.1 If, after the Effective Date, there is a Change in Law which will (or will reasonably be expected to) result in increased costs, lost revenue or savings, the Parties shall meet within **5 Business Days** of the Party providing written notice to the other of the Change in Law, the Parties shall meet to discuss the amendments required to this Agreement to preserve the commercial intent of this Agreement, provided that in the event that the Parties are unable to agree such amendments within **7 Business Days**, either Party shall refer the dispute to arbitration in accordance with Clause 27.2 above.

35.2.2 Within **5 Business Days** following the issuance of the arbitral award of the revised commercial terms, each Party shall provide written notification to the other Party as to whether the Party accepts or rejects the revised commercial terms, provided that if a Party fails to provide notification to the other Party within such period, the revised commercial terms shall be deemed to be accepted by such Party.

35.2.3 If either the Energy Services partner or the Customer reasonably considers that it is not commercially feasible to implement or enforce the arbitral award concerning the revised commercial terms, then the Energy Services Partner or the Customer may terminate this Agreement and, (i) in the case of the Customer terminating, the Customer shall be required to pay the Exit Amount (as stated in **Error! Reference source not found.**12 (Exit Amount)) in respect of all Managed Sites, less the total cost of remedial work evaluated under Clause 33.5.

36 OPTION OF TRANSFER OF ESP ENERGY EQUIPMENT AFTER EXPIRATION

36.1 Upon the expiration of the Term of this Agreement, the Customer and/or the End User shall have the option to purchase the ESP Energy Equipment. The purchase shall be made upon payment of an agreed purchase price within **thirty (30) days** of receipt of the applicable invoice from the Energy Services Partner.

36.2 To exercise this purchase option, the Customer and/or the End User must deliver a written purchase request to the Energy Services Partner within **five (5) days** following the expiration of the Agreement. The purchase request shall indicate the Customer's and/or End User's intention to acquire the ESP Energy Equipment.

36.3 Upon receipt of the purchase request, the Energy Services Partner shall evaluate and accept the request, subject to a pre-agreed valuation mechanism acceptable to the Parties. The valuation mechanism shall be used to determine the purchase price of the ESP Energy Equipment.

36.4 Upon receipt of the purchase price, the title of the ESP Energy Equipment, all rights, obligations, and liabilities associated with the ESP Energy Equipment shall transfer to the Customer and/or the End User.

37 LIMITATION OF LIABILITY

37.1 Consequential Loss

Neither Party shall be liable to the other Party under any theory of recovery, whether based in contract, tort (including negligence and strict liability), warranty, indemnity, defects liability or otherwise, for loss of use, loss of profit or revenue, loss of any contract, cost of capital, financing cost, loss of information or data, or for any indirect or consequential loss or damage which may be suffered by the other Party in connection with this Agreement.

37.2 Limit of Liability

The total liability of the Energy Services Partner to the Customer and/or the End User including obligations to indemnify and hold harmless, for any matters arising under or in connection with this Agreement (howsoever arising, including for breach of contract, in tort, by reason of indemnification, breach of statutory duty, equity or any other legal theory) shall in no case exceed an amount equal to 15% of the total Fees payable under this Agreement (the "**Overall Limit**"). The Overall Limit is inclusive of any liquidated damages payable under this Agreement.

38 NOTICES

38.1 Any notice required under this Agreement must be made in writing (which may include email) and in English language, and delivered by hand, email, registered post or courier using an internationally recognized courier company, to the addresses stated below. Each Party shall notify the other Party of any changes to its details as set out in this clause from time to time:

ZOODLABS (SL) LIMITED
Address: 37A Wilkinson Road, Freetown, Sierra Leone.
Attention: Group Chairman
Name: Davar Fazaeli
E. Mail: davar@rasab.io

SMART TELECOM LIMITED
Address: C/o 35 Jones Street, Top Floor, Freetown, Sierra Leone.
Attention: Group Chief Operating Officer
Name: David Kpakima
E. Mail: david@rasab.io

CROSSBOUNDARY ENERGY (SL) LIMITED
Address: c/o AXIS Fiduciary, Level 2, The AXIS, Cybercity, Ebene, Mauritius
Attention: Managing Partner and General Counsel
Name: Matthew Tilleard and Sebastian Deschler
E. Mail: CBEnotices@crossboundary.com

38.2 A notice shall be effective upon receipt and shall be deemed to have been received (i) at the time of delivery, if delivered by hand, registered post or courier; or (ii) at the time of transmission, if delivered by email, to the extent no delivery failure notification is received by the sender within **twenty-four (24) hours** of such transmission.

39 ENTIRE AGREEMENT AND AMENDMENT

39.1 This Agreement supersedes all previous communications, transactions, and undertakings, whether oral or written, and constitutes the sole and entire agreement between the Parties in respect of the provision of the Services and may not be amended except by a written document executed by both Parties.

39.2 A Party proposing an amendment to any term of this Agreement shall give a written notice of such intention to the other Party. The written notice shall specify in sufficient detail, the clause(s) sought to be amended, the proposed amendment, as well as the need for such amendment, and both Parties shall take steps to negotiate in good faith for the purpose of effecting such amendment as agreed by both Parties. Any amendment to this Agreement will not be binding on the Parties unless set out in writing, expressed to amend, or supplement this Agreement and signed by both Parties.

40 SEVERABILITY

If, at any time, any provision of this Agreement is or becomes illegal, invalid, or unenforceable in any respect under any jurisdiction, neither the legality, validity, or enforceability of the remaining provisions nor the legality, validity, or enforceability of such provision under any other jurisdiction will in any way be affected or impaired.

41 NON-WAIVER

No failure to exercise, or any delay in exercising, on the part of any Party, any right or remedy under this Agreement will operate as a waiver, neither will any single or partial exercise of any right or remedy prevent any further or the exercise of any other right or remedy. The rights and remedies provided in this Agreement are not exclusive of any rights or remedies provided by law and same may only be waived in writing and specifically.

42 COUNTERPARTS

This Agreement may be executed in any number of counterparts, each of which shall be deemed an original, but all such counterparts shall together constitute one and the same instrument.

(**Signature page follows**)

IN WITNESS WHEREOF the Parties have caused this Agreement to be signed in the manner hereinafter appearing the day and year first above written.

SIGNED FOR AND ON BEHALF OF ZOODLABS (SL) LIMITED BY

Director 1

Name: Davar Fazaeli

Capacity: Chairman Sign. ……

Witness No.1

Name: EMMANUEL TONDONEH

Sign. E.S.Tondoneh……

SIGNED FOR AND ON BEHALF OF SMART TELECOM LIMITED BY

Director 1

Name: David Kpakima

Capacity: Group Chief Operating Officer Sign. ……

Witness No.1

Name: EMMANUEL TONDONEH

Sign. E.S.Tondoneh……

SIGNED FOR AND ON BEHALF OF CROSSBOUNDARY ENERGY (SL) LIMITED BY

Director 1

Name: Matthew Tilleard

Capacity: Director

Matthew Tilleard (Oct 1, 2024 13:55 GMT+3)

Sign. ……

Witness No.1

Name: Rik Wuts

Sign. ……

SCHEDULE 1A
SCOPE OF WORK AND ENERGY SERVICES

This document details the scope of the energy services that will be delivered by the ESP to the Customer under the Agreement.

The services are broken down into the various models delivered to the Customer, and associated dependencies on the Customer and the End User, which models are as follows:

(i) The End User and the Customer engaging the Energy Services Partner to provide energy services and maintenance services on some of its telecommunications sites (which is anticipated to be around 72 sites) (each a "**Site**") as more particularly detailed in this Agreement, as well as other ancillary services at some Sites in accordance with the terms and conditions of this Agreement (hereinafter referred to as the "**Services**") in Sierra Leone.

(ii) The End User and the Customer engaging the Energy Services Partner to deploy standalone hybrid-solar power plants to supply power to Customer Sites; and

(iii) the Energy Services Partner purchasing some of the existing energy equipment on Customer Sites

The operations and maintenance of all sites and to maintain Power Availability and uptime are captured in Schedule 1B (Scope of Services Maintenance).

1. General

1.1 This document describes the broad scope of Services delivered by the ESP to the Customer under this Agreement.

1.2 The ESP shall be responsible for the scope of Services as provided in the Agreement except during any Force Majeure or as provided in the Agreement. Recognizing that telecommunications is an essential service, particularly during emergencies, the ESP will make every reasonable effort on a reasonable endeavour basis to ensure the continuation of services during such periods.

2. Energy Services – ESCO Sites

2.1 The ESP is required to install and maintain the ESP Energy Equipment at each Managed Site.

2.2 The ESP will, through the operation of the ESP Energy Equipment, provide DC and/or AC power to each Managed Site, against the technical site configurations defined in the relevant site Acceptance Certificate.

2.3 The ESP will prioritize the supply of power from solar, battery and grid sources, with a Fuel backup system to ensure uninterrupted power availability to each Managed Site subject to the contracted power uptime levels.

2.4 The Services will be provided to a single DC bus inside of Customer DC distribution unit ("**DCDU**") and AC output from an inverter ranging from 500W – 5000W for AC load where applicable.

2.5 Where a Managed Site is connected to the grid during the contract term, the ESP will facilitate the provision of grid power into its ESP Energy Equipment to reduce reliance on Fuel. The Solar comes as priority one (1) in this scenario with Grid as priority two(2) and DG as priority three(3), each scenario is activated based on availability once the battery storage gets to the set minimum SOC for charging. The Customer will be responsible for connecting sites to the grid and fulfilling its payment obligations for the

grid power.

3. **Fuel**

3.1 Issuance

3.1.1 The ESP will procure an allocation of Fuel per month per Managed Site as defined by the technical configuration stated in the Site Acceptance Certificate. This allocation is based on the load and ESP Energy Equipment and is fixed unless otherwise agreed by the parties ("**Site Fuel Allocation**").

3.1.2 The ESP will conduct a quality test on the Fuel prior to refuelling the sites. Upon successful completion and acceptance of the quality test, the ESP will transfer the Fuel to the Managed Sites. The ESP will bear full responsibility for the Fuel risk throughout the entire process

3.2 Fuel consumption

3.2.1 Fuel consumption will be defined by the number of litres consumed by the DG in accordance with the OEM fuel consumption rate estimations. This consumption will be recorded by the ESP monitoring systems and reported to the NOC.

3.2.2 Increased Load

3.2.2.1 If the Fuel consumption is higher than the Site Fuel Allocation agreed at Site Acceptance due to increased load, then the Customer will be liable for an increase in fuel allocation as outlined in Schedule 3 (Pricing and Payment Terms).

3.2.3 Material Fuel Losses

3.2.3.1 The Parties agree that the ESP will bear responsibility for all excess fuel loss or consumption, including by running the diesel generator (DG) for more hours than forecasted, higher-than-expected fuel consumption per hour, or equipment malfunction, with the exception of the following causes, which will be the responsibility of the Customer:

A) Site load increases where the load demand increases above the expected load requirements for that month, and

B) Proven theft of fuel from site storage facilities. This will be verified through the ESP RMS data feeds. The ESP will support the Customer with the timely provision of data, investigations, and other information to support Customer's investigations and claims.

3.2.4 Fuel consumption accounting

3.2.4.1 The ESP may offset reduced fuel consumption at one Managed Site against over-consumption of fuel exceeding the defined allocation at another Managed Site within the same month.

3.2.4.2 If the ESP consumes less fuel than the allocated amount, the Customer will issue a quarterly credit note. This credit note will be calculated using the average fuel price for the quarter.

3.2.4.3 If the ESP consumes more fuel than the allocated the Customer shall issue a quarterly debit note for the excess fuel consumed. This debit note will be based on the average fuel price for the relevant quarter.

3.2.5 Grid

3.2.5.1 If Fuel consumption is reduced through the consumption of grid power by the ESP Energy Equipment, then the monthly Fuel allocation to the ESP for that Managed Site will be reduced by a corresponding amount. This calculation will be based on the total power in kWh provided by the grid as measured as consumed at the grid meter in kWh, by using the formula:

A = B x 0.25

Where:

A is the volume of Fuel in litres that the ESP Fuel allocation will be reduced by for a given calendar month, and

B is the Total kWh of grid power consumed by the ESP Energy Equipment during that calendar month.

Adjustments to Fuel allocation will be managed quarterly in arrears as part of quarterly reconciliation as outlined in Schedule 3 (Pricing and Payment Terms).

4. Zero Fuel Energy Provision Plans

4.1 The ESP will work together with the Customer in good faith to present strategies to reduce Fuel consumption on Managed Sites through various measures, including but not limited to:

4.1.1 expansion of the solar ESP Energy Equipment on-site or on an adjacent site;

4.1.2 connecting to grid supply.

4.2 Site Expansion: “Offsite”

4.2.1 As provided above and to reduce Fuel consumption, the ESP may propose expanding the solar capacity of a Managed Site. The ESP will provide increased solar modules, and mounting structures, requiring the Customer to provide additional Land and associated Passive Infrastructure at or adjacent to the Managed site.

4.2.2 Each proposal for expansion of a Managed Site will detail:

4.2.2.1 Energy Assets: The energy infrastructure to be installed on-site and the impact on performance. The ESP will have a full description of ESP Energy Equipment design, specifications and suppliers.

4.2.2.2 Non-energy Assets: A list of non-energy assets, activities and civil works that are required to bring the expanded site online. This will include but not be limited to fencing, towers, pathways, security assets (doors, locks etc), and all necessary ancillary equipment to

connect the power system to the existing Site.

4.2.2.3 Land: The ESP will support Customer to identify, negotiate, and determine the pricing for the lease or purchase of any necessary adjacent land to the existing site. The details, nature, and conditions of the land lease or purchase will be included in the proposal for each site.

4.2.2.4 Performance: The ESP will outline the performance of the system design based on actual and forecast power and Fuel consumption.

4.2.2.5 Costing: The ESP will provide a fully costed proposal for the Customer review and approval, and how the change in system deployed would change the lease price.

4.2.3 If a proposal for Site expansion is accepted, then the ESP will deliver the following services:

4.2.3.1 The energy system design, procurement, storage, installation and commissioning.

4.2.3.2 Land requirements for Customer execution,

5. **Variations / Change Management on Managed Sites**

5.1 From time to time, either Party may make requests for changes/variations to the Managed Site ("Variation Request"). Minor changes to Managed Sites, or those that are not related to the overall performance of the power system, will be managed under operational routine maintenance and non-routine maintenance processes.

5.2 Site Amendment, alteration or relocation

5.2.1 Customer may inform the ESP of a planned increase or decrease in power requirements, or any alteration, or relocation required at a Managed Site, due to changes in active infrastructure, power demand, or other commercial, operational reasons or external factors. The Customer will request the change to the ESP through a Site Variation Request Template, see Variation Request Template below, that details the requested performance changes. The ESP can also notify the Customer of the need for an increase in the power system due to an increase in load requirements.

5.2.2 After receipt of the Variation Request, the ESP will evaluate the request, and return to the Customer a change response, which covers the technical, operational and commercial considerations of the proposed change

5.2.3 A change response shall include, at minimum, the following

5.2.3.1 a description of the proposed work and/or services to be performed and the programme for its execution

5.2.3.2 a proposal for the cost of same;

5.2.3.3 any change to the Fees (including any upgrade fees) applicable to a Managed Site that would result from the proposed work and/or service

5.2.3.4 any other amendments proposed to this Agreement in connection with such proposed work and/or services

VARIATION REQUEST TEMPLATE

Site Location:

Site Name:

State:

New Tenant Name:

New Equipment Voltage Range:

Equipment Power Rating:

Proposed Equipment Termination Date:

Site Energy Specifications:

Site Land Description:

Overall Description of changes required:

Detailed Requirements

Number	Work Required	Comment. Detail

Target Performance impact:

Target Completion Date.

SCHEDULE 1B
SCOPE OF MAINTENANCE WORK AND SERVICES

This document details the scope of the power, maintenance, security, and other operational services that will be delivered by the ESP to the Customer under the Agreement.

The services are broken down into stages relating to the lifecycle of the project, highlighting key deliverables and responsibilities of the ESP, and dependencies on the Customer.

1. **General**

1.1 This document describes the broad scope of maintenance and operations under the Agreement, that are necessary to meet performance targets.

1.2 The ESP shall have technical, financial, and management expertise in managing various kinds of power system infrastructure. It shall have the necessary skilled manpower to administer and manage all operational and maintenance activities under the Agreement.

1.3 The ESP or its authorized representatives shall have 24 hours 365 days (about 12 months) access to all Sites (subject to compliance with Managed Site access provisions) to undertake corrective maintenance on its power systems.

1.4 The ESP shall be responsible for the scope of Service as provided in the Agreement except during instances of Force Majeure or as provided in the Agreement. Recognizing that telecommunications is an essential service, particularly during emergencies, the ESP will make every reasonable effort on a reasonable endeavours basis to ensure the continuation of services during such periods.

2. **Network Operations Centre ("NOC")**

2.1 The ESP will provide 24x7x365 monitoring of all energy infrastructure, hosted in the Customer's existing NOC. The ESP will provide sensors, systems and staff required to monitor assets under its responsibility and respond to events and incidents as required to meet SLAs.

2.2 The Customer will provide backhaul ethernet access to the ESP as is necessary for transmission of data from the on-site RMS hardware to its cloud-based platform. The ESP will endeavour to minimize the volume of data that is transmitted per site. Any backup IOT-based connectivity solutions will be the responsibility of ESP.

2.3 All ESP monitoring personnel ("**ESP NOC Team**") will be fully trained in the requisite Customer NOC processes, security, and other incident management processes that are necessary to deliver the Services for the Customer. The ESP may use subcontractor resources as part of the ESP NOC Team, subject to confidentiality agreements being established between the subcontractor and Customer.

2.4 The Customer shall provide all required policies and processes well in advance of the NOC commissioning to ensure a seamless handover to the ESP. Additionally, the Customer will make expert resources available to the ESP to support the training of staff in Customer processes and platforms that are required to be used.

2.5 The ESP will perform the following tasks and services:

2.5.1 Event Management: generation and detection of alarms from all operational assets, and the management of them. The ESP will also determine the

definitions of what generates an alarm and what standards are required to clear an alarm.

2.5.2 Problem & Incident Management: generation and detection of incidents from events, and management of them through to closure. The ESP will determine and review what determines an incident from the event(s).

2.5.3 Performance Management: data collection on operational assets and energy performance, and analysis.

2.5.4 Preventative Maintenance: The ESP NOC team will manage the schedule and planning of routine maintenance across all operational assets, including the management of all job-ticketing systems and platforms.

2.5.5 Corrective Maintenance: The ESP NOC team will manage the schedule, planning, deployment, and acceptance of all corrective and emergency maintenance, including remote diagnosis, tests, and other assessments.

2.5.6 Field Service Management: The ESP NOC Team will generate, oversee, evaluate, and close job tickets for field service agents and other subcontractors to deliver preventative and corrective maintenance activities across operating assets.

2.5.7 Site Logging: The ESP NOC Team will generate, maintain, and store digital records of each site, its assets, maintenance, access records, and all activities performed at the Site.

2.5.8 Reporting: The ESP NOC Team will generate routine and bespoke performance reports and analyses to deliver to the ESP.

2.6 All Customer's requests for information, data, routine or non-routine services, or any other activity regarding the delivery of the ESP's Services to the Customer, will be submitted through a formal process to a single nominated ESP representative.

2.7 The Customer shall notify the ESP NOC team in advance of any scheduled work, including but not limited to activities on Active Infrastructure or towers, conducted by the Customer, the End User or MNO.

2.8 General Customer NOC Obligations include:

2.8.1 The Customer will make available and give full permission to the ESP to monitor its assets before the Acceptance Date of each Committed Site, as required during Site Acceptance testing

2.8.2 The Customer will provide sufficient space within the NOC for the ESP NOC Team, including security access and other facilities.

2.8.3 The Customer will work collaboratively with the ESP to integrate monitoring systems into the NOC network topology, in line with its IT and Cyber Security policies.

2.8.4 The Customer will make available expert resources to the ESP, to support the training of the ESP NOC Team in Customer platforms that are required to be used.

2.9 General ESP NOC Obligations include:

2.9.1 The ESP shall provide Customer NOC staff with full access to real-time high-level KPIs as identified in Schedule 4 (SLA) for each Managed Site.

2.9.2 The ESP shall provide the Customer with an escalation matrix that clearly states the names and contact numbers of responsible persons who will receive and attend to fault alarms at Managed Sites, according to the classification of the incident and alarm.

2.9.3 The ESP shall release daily reports on critical alarms, faults, and outages at Managed Sites, along with any other relevant and requested reports and details in the formats provided by the Customer.

2.9.4 The ESP shall provide feedback and contribute to the Customer's process analysis and improvement efforts to increase performance. The Customer will invite the ESP to participate in process improvement discussions.

3. **Maintenance**

3.1 Preventative and Routine Maintenance ("PPM") Scope

3.1.1 The ESP will provide the Customer with PPM of the ESP Energy Equipment within the Managed Site on a regular basis to minimize the risk of equipment failure. PPM involves the scheduled operation of a system of inspections and regular maintenance routines designed to optimize the operation of the Passive Infrastructure on the Managed Site.

3.1.2 Scope of PPM:

3.1.2.1 The ESP will be solely responsible for all routine and preventative maintenance of the ESP Energy Equipment. The ESP will ensure such PPM is conducted to keep each Managed Site running efficiently

3.1.2.2 The ESP will visit Managed Sites at intervals that correspond with requirements to effectively maintain equipment per clause 4.1.2.

3.1.3 If the ESP needs to power down or carry out any activities (including any change management activity defined by the NOC) that may trigger alarms to the NOC, the ESP will notify the NOC and the Customer with reasonable notice of the intent to carry out such work.

3.1.4 During any Managed Site visit whether planned or unplanned, the ESP shall report any new faults identified (including but not limited to faults, failures, breakages, vandalism, theft, etc.). ESP will record all faults with a ticketing system.

3.1.5 Prior to leaving a Managed Site and to the extent reasonably possible, the ESP will rectify all/any defects, irregularities and/or malfunctions affecting the ESP Energy Equipment or Passive Infrastructure that impact key SLAs/KPIs related to Site uptime.

3.1.6 Faults that are not of a service-affecting nature may be resolved by the ESP or the Customer in line with other planned maintenance activities.

3.2 Emergency Response Maintenance ("ERM") Scope

ESP will provide the Customer ERM of Equipment within the Managed Site as necessary to provide the Services on the following basis:

3.2.1 ERM is required to address any incident at the Managed Site that prevents normal operation and cannot be rectified remotely. ERM consists of actions necessary to rectify a service-affecting (or potentially service-affecting) fault that cannot be deferred until the next scheduled PPM visit

3.2.2 ERM will be available for any site within the ESP's responsibility, as per the SLAs defined in Schedule 4 (SLA). The ESP will have the capacity to perform ERM at any site, at any time (24/7/365), subject to the extent and priority of the required ERM and relevant security considerations.

3.2.3 The ESP will maintain logs of all incidents and ERM activities required for each incident. These will be reported to the NOC on identification and resolution of the incident.

3.2.4 The ESP will ensure that processes and communication channels are available for the Customer to investigate service-affecting incidents.

3.3 Janitorial Maintenance Scope

3.3.1 The Customer shall be responsible for providing janitorial services at the Managed Site location, as is necessary so as not to damage ESP Energy Equipment or impede the execution of PPM or ERM.

3.4 Exclusions from Maintenance Scope

3.4.1 Snags

3.4.1.1 During the term of the Agreement, the Customer shall be responsible for repairing any snags observed on any equipment up to the cables on the load side of the interconnection breakers inside the external DC distribution unit.

3.4.1.2 During the Technical Site Survey, the ESP will inform the Customer of any snags observed on all equipment up to the cables on the load side of the interconnection breakers inside the external DC distribution unit.

3.4.1.3 The Customer will be responsible for remedying these snags within 30 days of notice from the ESP.

3.4.2 Non-Routine Maintenance

3.4.2.1 Corrective and non-routine maintenance activities in respect to tower, civil and Passive Infrastructure, and all non-ESP Energy Equipment are out of the ESP's scope.

3.4.2.2 For the Avoidance of doubt, non-routine maintenance shall include but not be limited to the following activities:

3.4.2.2.1 Checking of battery back-up unit and RFU.

3.4.2.2.2 Checking of Roxtec, Cable tray, Indoor & Outdoor

Cable routing, and retightening of Power and jumper connectors on BBU, RFU & other active equipment.

3.4.2.2.3 Rough Opening/Civil-related maintenance.

3.4.2.2.4 Microwave outdoor unit cable and other active equipment's cable.

3.4.2.2.5 Tower torquing, painting, climbing, structural evaluations and any tower-related maintenance or inspection, except monthly ground-level inspections.

3.4.2.2.6 Access roads and other civil infrastructure repairs.

3.4.2.2.7 Aircraft warning light repairs and maintenance

3.5 Spares

3.5.1 ESP Energy Equipment

3.5.1.1 The ESP shall provide all spares necessary that are required for the routine maintenance of the ESP Energy Equipment.

3.5.1.2 The Customer shall be responsible for the payment of any spares required due to damage caused by the Customer, the Customer's authorized representatives, or network partners.

3.5.2 Traceability and Disposal

3.5.2.1 The ESP will ensure that all spares are traceable throughout their usage. The traceability process must be able to provide an audit trail for the use of correct parts, that is the process that will prevent the substitution of approved spares with spares that are not approved for use equipment. The serial numbers will be recorded for all Spares utilized per Site.

3.6 Active Infrastructure

3.6.1 For the avoidance of doubt, the ESP will not be responsible for any Active Infrastructure, associated maintenance and/or provision of spares in any way.

3.7 Site Records

3.7.1 The ESP will maintain a schedule of planned maintenance of the ESP Energy Equipment including site access requirements and Spares requirements.

3.7.2 The ESP will periodically issue to the Customer a schedule of planned maintenance for the coming period.

3.7.3 All maintenance will be recorded by the ESP, including what work has been completed, what assets have been replaced, and when the next scheduled maintenance is required for each Managed Site.

3.7.4 The ESP will maintain a digital log of all maintenance for each Managed Site.

3.7.5 The digital maintenance records will be signed off by field staff and agents in the maintenance log on-site or via the monitoring system and NOC.

3.8 Asset Database

3.8.1 The ESP will develop and maintain a Site assets database and submit it to the Customer when requested. The assets database shall include but not be limited to type, rating, capacity, installation date, model, make, grid connectivity (Yes/No), status of connectivity, contract demand with grid utility provider, hybrid, type of Site etc., and list components and equipment deployed on each Managed Site.

4. Site Security

4.1 Security

4.1.1 The Customer will be responsible for the security at each Managed Site, and all assets registered within the Managed Site from the point of Site Acceptance, to protect the ESP, the Customer, and the End User assets from theft, damage and unauthorized removal, and prevent unauthorized access to sites.

4.1.2 The Customer will be responsible for all physical security assets such as locks, keys, lights, fences, alarms, CCTV, as well as all security services including guarding, emergency response and alarm management as necessary per the security standards applicable for each Managed Site. The maintenance and upkeep of the relevant security assets is the responsibility of the Customer.

4.1.3 The Customer will nominate a security point of contact for the provision of all security services to ESP. The ESP will nominate a single representative for all security communication, reporting, and liaison.

PPM SCOPE

The scope of PPM, which the ESP will provide may include the following:

1. Grid utility power connection, functionality, and all corresponding equipment
2. Power generation system-generators, generator control panels, soundproofs, diesel line connections, etc.
3. DC power systems -rectifiers, batteries, batteries chillers, corresponding cabinets, racks, DCDBs, etc.
4. AC power system -AVRs, ATS, AMF panels, ACDB, surge arrestors, fuse boxes, meter boxes, power cables, wires, etc.
5. Fuel storage
6. All aspects of ESP Energy Equipment; new technical/energy efficient initiatives like fuel cells, solar system, DCDGs etc.

SCHEDULE 2
ESP ENERGY EQUIPMENT DESIGN

1. General

1.1. The ESP will design a solution that will meet the power requirements of each Committed Site. The solution shall be easily scalable to meet additional power requirements in the future.

1.2. The power solution shall include the following main components:

- 1.2.1. Solar Photovoltaic (PV) panels and PV racking
- 1.2.2. Battery energy storage system (BESS) and Battery cabinets
- 1.2.3. Diesel Generator
- 1.2.4. DC Power system with rectifier and solar chargers and Power system cabinet
- 1.2.5. Site controller or communication module and Remote management system

2. Technical specifications

2.1. The Solar Photovoltaic panels and PV racking should meet the following minimum requirements:

- 2.1.1. PV panels
  - 2.1.1.1. Minimum capacity: 500 Wp
  - 2.1.1.2. Efficiency > 20%
  - 2.1.1.3. Sourced from a Tier 1 PV manufacturer.
  - 2.1.1.4. Performance degradation: maximum 20% in 25 years
- 2.1.2. PV racking
  - 2.1.2.1. Hot dip galvanized steel
  - 2.1.2.2. Tilt: 5°-10° +/- 1°.
  - 2.1.2.3. Design should be adjustable to accommodate differing site conditions including perimeter dimensions, object height, and ground obstructions.

2.2. The BESS and its cabinet should meet the following minimum requirements:

- 2.2.1. BESS
  - 2.2.1.1. Battery type: Lithium-ion (LFP or NMC)
  - 2.2.1.2. Withstand operating temperatures of 0°C to 45°C.
  - 2.2.1.3. Roundtrip Efficiency > 90% @10-hour discharge, @25°C
  - 2.2.1.4. Cycle lifetime: minimum 3,000 cycles at 80% DoD, @25°C
  - 2.2.1.5. Voltage should be within the following range: 44V and 58V between 10% and 95% DoD
  - 2.2.1.6. Includes BMS which reports the minimum following data – Battery charging and discharging current (A), battery voltage (V) and individual cell voltage (V), temperature (°C), Battery State of Charge (SOC), Battery cycles.
- 2.2.2. Battery cabinet (if applicable)
  - 2.2.2.1. Ingress Protection: IP55 minimum modified after purchase to achieve IP65
  - 2.2.2.2. Includes at minimum a temperature sensor, smoke sensor, and door open sensor
  - 2.2.2.3. Cooling system: fan cooling minimum

2.3. The Diesel Generator should meet the following minimum requirements:

- 2.3.1. Diesel generator
  - 2.3.1.1. Brand and model: sourced from a manufacturer/supplier that has proven strong local presence.

2.3.1.2. Frequency: 50 Hz
2.3.1.3. Sound-attenuated and weather-protective enclosure
2.3.1.4. Integrated fuel tank >50 L

2.3.2. Controller

2.3.2.1. Enables automation of Diesel Generator management via start/stop, over current protection, unbalanced load protection, independent earth fault protection,

2.3.2.2. The controller should report the minimum following data from the Generator – Current and power (kW, kVAr, kVA, pf, A), running hours (RH), energy counter (kWh), start battery voltage (V), status (Auto or Manual/ active or off), engine RPM, engine temperature.

2.3.2.3. The controller should report the minimum following data from the fuel sensor – Fuel level, fuel daily consumption, unexpected Fuel drop.

2.3.2.4. The controller shall display the following alarms – Low oil level, low voltage starter battery, high temperature, fail start, door open, unexpected fuel drop or increase.

2.4. The Power system and its cabinet should meet the following minimum requirements:

2.4.1. Power system

2.4.1.1. Modular configuration with shelves for MPPT solar chargers and rectifiers
2.4.1.2. Minimum capacity – 18 kW rectifier and 18 kW solar
2.4.1.3. Voltage range should range from -43V to -58V
2.4.1.4. Rectifier minimum peak efficiency – 96%
2.4.1.5. MPPT solar charger minimum peak efficiency – 96%
2.4.1.6. Includes a main controller as well as I/O module, communication, and cellular gateway.
2.4.1.7. The controller shall report the minimum following data – rectifier and MPPT solar charger voltage (V), current (A), power (W), alarms.
2.4.1.8. Includes the following protections.
(a) AC input with Surge Protection Device (SPD) type 2
(b) DC input with SPD type 2
(c) DC output with SPD type 2
(d) LVLD (Low Voltage Load Disconnector) with Shunt
(e) LVBD (Low Voltage Battery Disconnector) with Shunt
2.4.1.9. Includes an ATS to switch priority between grid and diesel generator (If applicable and only on sites with a grid connection)
2.4.1.10. Includes a 2.5 kW DC/AC inverter (If applicable and only on sites with external AC Air conditioning units) and a 500W DC/AC inverter for other sites

2.4.2. Power system cabinet

2.4.2.1. Ingress Protection: IP55 minimum
2.4.2.2. Includes the following temperature sensor, smoke sensor, and door open sensor
2.4.2.3. Cooling system: fan cooling minimum

2.4.3. DC Distribution Unit (DCDU) shall include the following components:

2.4.3.1. a 1 x 125 A 2P Gang to form 250A or 2 x 125 A 2P Gang MCB to form a 500 A MCB connected to 8 terminal blocks for the different tenants
2.4.3.2. a 1 x 63 A MCB for optional 500W - 5kW inverter connected to 2 terminal blocks to connect to a maximum of 2 AC Air conditioning units
2.4.3.3. MCBs for power system ancillaries (lights, batteries, smoke detectors, RMS, fans, etc)

2.5. The fuel storage tank should meet the following minimum requirements:

2.5.1. Weatherproof + lifting rings with high corrosion resistant
2.5.2. Lock antitheft design

2.5.3. Fuel probes
2.5.4. Single wall
2.5.5. Drain plugs and Fuel-Water Separator

2.6. The Site controller or communication module and Remote Monitoring System should meet the following minimum requirements:

2.6.1. Communication module
2.6.1.1. Enables data transmission through GSM or Ethernet network at minimum.
2.6.1.2. Support for standard communication protocols such as SNMP (Simple Network Management Protocol), Modbus, TCP/IP.
2.6.1.3. Advanced security features to prevent unauthorized access, including firewall protection, encryption of data in transit and at rest, and secure authentication methods.
2.6.1.4. The ability to scale up or modify according to the site's requirements without significant changes to the existing setup.
2.6.1.5. High reliability and uptime, with failover mechanisms in place to ensure continuous operation.
2.6.1.6. Enables to send alarm notification through multiple channels.

2.6.2. Remote Monitoring System
2.6.2.1. Alarm Management via direct visibility on the platform and Email/SMS or WhatsApp notification.
2.6.2.2. Site analysis through details of current and historical events, site design description and Single line Charts
2.6.2.3. Capabilities to monitor environmental conditions, such as temperature and humidity, to ensure equipment is operating within safe parameters.

3. Technical Configuration

3.1. The ESP will allocate a technical configuration to each Committed Site.

3.1.1. Customer will provide load requirements per Committed Site (average load, peak load, forecast load in kwh), load requirements, and forecast for the next 12 months load requirements.

3.1.2. The ESP will proceed to a TSS to capture available space for solar panels at each committed site.

3.1.3. The technical configuration will be designed to ensure maximum renewable penetration and will be determined by:
3.1.3.1. Load requirements: The ESP shall determine the load requirements at the site according to the TSS, as well as historical and forecasted load data shared by Customer
3.1.3.2. Solar capacity: The ESP shall determine the maximum quantity of solar panels that can be installed at the site location during TSS.
3.1.3.3. Battery capacity: The ESP shall determine the battery capacity to ensure maximum solar penetration and minimum diesel generator runtime and fuel consumption.
3.1.3.4. Diesel Generator: The ESP will size diesel generator to ensure optimal use of it at its peak efficiency point. The diesel generator shall be allocated according to the battery capacity and load at each site to ensure the SLAs on fuel consumption and diesel generator runtime are respected

3.2. The Single Line Diagram in Annex 1 shows a general overview of the solution

4. Exclusion

4.1. The ESP shall not be responsible to supply equipment other than the ones detailed above.

4.2. The ESP's supply responsibility ends at the termination blocks of the power system DC Distribution Unit, the ESP shall not be responsible to supply the cables from the termination point of the power system onwards. To clarify, The ESP shall not be responsible to supply the cables that connect the termination points of the termination blocks of the power system DC Distribution Units to the Telecom equipment distribution boxes or to the Telecom equipment, or the ones that connect the DC termination block or DC/AC inverter to the air conditioning units.

Annexure 1: Single Line Diagram

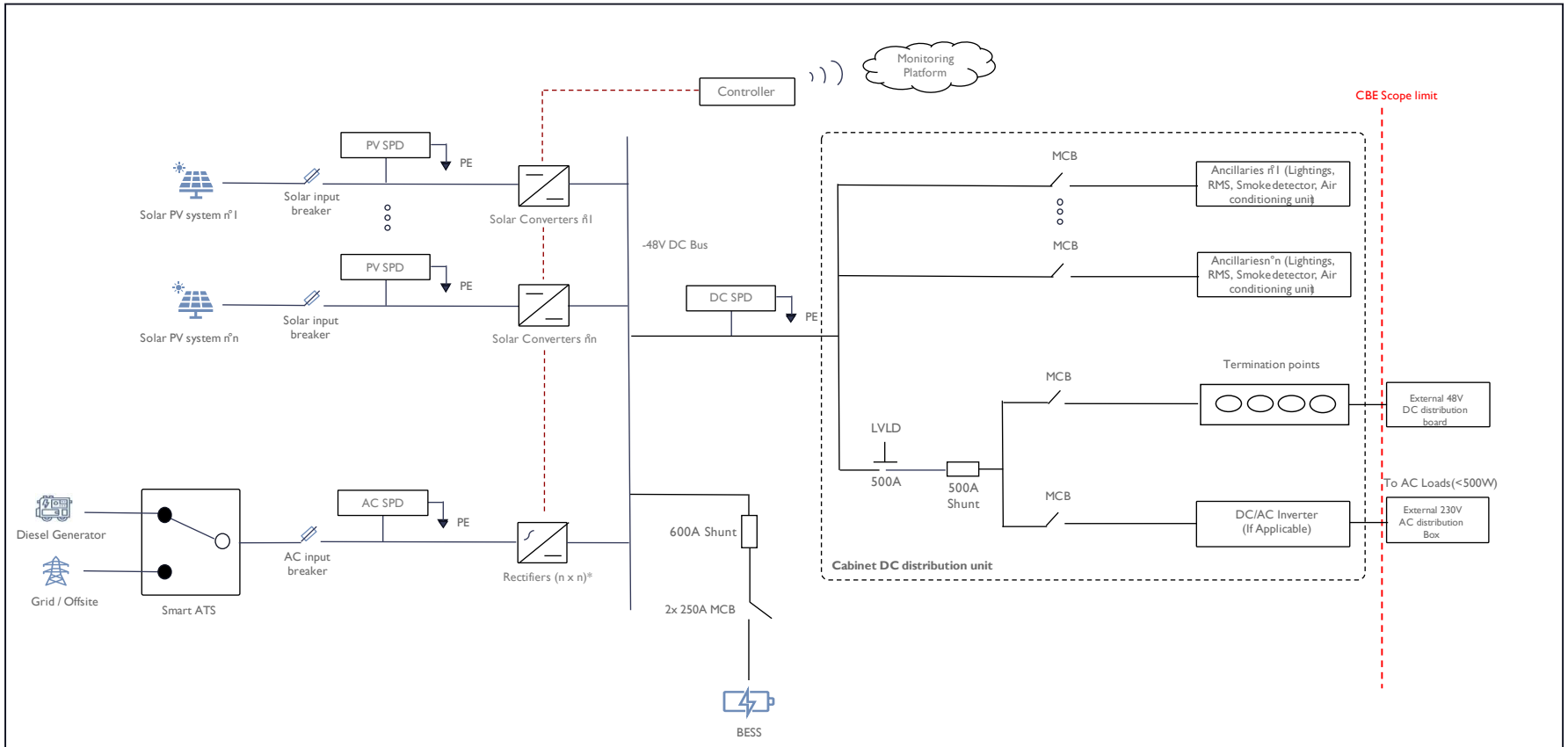

*each rectifier is Single phase and it's connected each phase of the diesel generator

Copyright © by CrossBoundary. Confidential. Proprietary. Privileged.

Annex A: Optimal Site Solution Configuration

Number	Site Name	Load (Existing)	Load (New)	Solution Category	Generator Capacity (kVA)	Solar Slot Capacity (kWp)	Rectifier Slot Capacity (KW)	Battery Capacity (kwh)
1.	SLBC 7th Battalion		3	SGB 48 3000	22	26.4	24	84
2.	Lumley Jnx		3	SGB 48 3000	22	26.4	24	84
3.	Hill Station		3	SGB 48 3000	22	26.4	24	84
4.	MMCET		3	SGB 48 3000	22	26.4	24	84
5.	Limkokwing University		3	SGB 48 3000	22	26.4	24	84
6.	Collegiate Rd		3	SGB 48 3000	22	26.4	24	84
7.	No Donkey		3	SGB 48 3000	22	26.4	24	84
8.	Leicester Peak	3	3	SGB 12 6000	22	6.6	24	120
9.	Kennedy Building		3	SGB 48 3000	22	26.4	24	84
10.	Tower Hill	2	3	SGB 12 5000	22	6.6	24	120
11.	Murray		3	SGB 48 3000	22	26.4	24	84
12.	Wilberforce		3	SGB 48 3000	22	26.4	24	84
13.	Youyi Building	3	3	SGB 12 6000	22	6.6	24	120
14.	Sierra Palms		3	100% GE-N	0	0	24	48
15.	Bintumani	2	3	SGB 12 5000	22	6.6	24	120
16.	CLS		3	100% GE 3000	22	0	24	36
17.	CLS Server (x2)		18	100% GE 18000	22	0	24	108

18.	YamsFarm		3	SGB 48 3000	22	26.4	24	84
19.	Upgun		3	SGB 48 3000	22	26.4	24	84
20.	Wellington		3	SGB 48 3000	22	26.4	24	84
21.	Jui Jnx		3	SGB 48 3000	22	26.4	24	84
22.	Rokupa		3	SGB 48 3000	22	26.4	24	84
23.	Additional Sites (pending client's confirmation)		3	SGB 48 3000	22	26.4	24	84

Twenty-Two (22) confirmed sites optimal configuration and equipment's description.
**Dependent on space availability, approvals and other constraints that might impact the deployment of the optimal solution.*

SCHEDULE 3
PRICING AND PAYMENT TERMS

1. Considering the provision of Services performed by the ESP under the Agreement, Customer shall pay the ESP the Fee components as set out below. The Fees are payable on a per Managed Site basis and shall be applied according to each Managed Site's configuration, battery sizing and priority status.

1.1 Energy Fee

An operating lease fee for the assets will be charged in dollars and will escalate by 2.5% annually over the 10-year lease period, starting from the Acceptance Date of each Managed Site. See Appendix 1 for the energy fee to be paid for power generation per topology at the start of the Agreement.

1.2 Services Fee

The services fee for each site covering operations and maintenance of the ESP Energy Equipment will be charged in dollars and will escalate by 3.29% (US CPI) annually over the 10-year period, starting from the Acceptance Date of each Managed Site. See Appendix 1 for the service fee to be paid for power generation per topology at the start of the Agreement.

1.3 Fuel Cost

ESP will be allocated a volume of Diesel per Managed Site per month, determined by the load required and the technical system installed. See Appendix 2 for the initial fuel allocated to each topology.

The ESP will charge the Customer for the purchase of the fuel allocation based on actual cost plus a 4% administration fee.

Appendix 1: Energy Fee and Services Fee

Site name	Phase 1 Energy Fee (USD/month/ site)	Phase 2 Energy Fee (USD/month/ site)	Services Fee (USD/month/ site)	DG Capacity (kVa)	End User Site Load	Customer Site Load
MMCET	1,191	1,760	328	22	3	
Wilberforce	1,242	1,813	328	22	3	
Hillstation	1,189	1,760	328	22	3	
Murray Tower	1,189	1,760	328	22	3	
Limkokwing	1,191	1,760	328	22	3	
No Donkey	1,191	1,760	328	22	3	
SLBC 7th Bath	1,191	1,760	328	22	3	
CLS - Tower	912	953	173	-	3	
CLS – Server	2,053	2,091	173	-		18
Bintumani	2,289	2,805	328	22	3	2
LumleyJnx	1,191	1,760	328	22	3	
LeicesterPeak	2,345	2,805	328	22	3	3
KenedyBld	1,420	2,013	328	22	3	
TowerHill	2,289	2,805	328	22	3	2
YouyiBld	2,431	2,890	328	22	3	3
SierraPalms	931	953	173		3	
Additional sites**	N/A	1,760	328	22	3	

**The load considered includes a 3kW avg. load for each 5G equipment, as well as the average current load measured on each POP site and displayed on the AlphaESS monitoring platform.*

*** Additional Sites are all considered to have similar load profiles with a 3kW average load. The same power system will be installed at each location.*

Appendix 2: Fuel Allocation

Site Name	Phase 1 Diesel Consumption (L/month/ site)	Phase 2 Diesel Consumption/ Optimal Solution (L/month/ site)
MMCET	813 L	86 L
Wilberforce	813 L	86 L
Hillstation	813 L	86 L
Murray Tower	813 L	86 L
Limkokwing	813 L	86 L
No Donkey	813 L	86 L
SLBC 7th Bath	813 L	86 L
CLS	0 L	0 L
CLS – Server	0 L	0 L
Bintumani	741 L	215 L
LumleyJnx	813 L	86 L
LeicesterPeak	907 L	237 L
KenedyBld	813 L	86 L
TowerHill	741 L	215 L
YouyiBld	907 L	237 L
SierraPalms	0 L	0 L
Additional sites**	N/A	86 L

Appendix 3: Diesel Consumption Chart (Load vs PV panels installed)

Fuel (Liters per month)	DG Size	No. of PV panels (550W)											
Load (W)		**0**	**6**	**12**	**18**	**24**	**30**	**36**	**42**	**48**	**54**	**60**	**66**
3000	22kVA	813	696	580	507	379	283	167	110	86	69	46	35
3500	22kVA	948	834	726	610	502	406	288	178	124	93	74	54
4000	22kVA	1084	966	848	756	657	550	460	331	203	150	116	92
4500	22kVA	1218	1103	985	889	787	686	581	476	332	229	171	140
5000	22kVA	1353	1239	1121	1018	918	806	711	605	460	346	253	194
5500	22kVA	1489	1373	1258	1143	1052	979	867	779	638	502	391	301
6000	22kVA	1626	1508	1392	1273	1181	1095	982	868	759	640	507	405

SCHEDULE 4
SLA AND PENALTIES

The Energy Services Partner shall abide by and achieve the following service levels:

1. Monthly Green Electrical Power Availability

1.1 The Energy Services Partner shall ensure that in each calendar month the Actual Power Availability (as defined below) at each Managed Site is at least in accordance with the relevant Power Availability Service Levels set out in **Table A (Power Availability Service Levels),** below.

"**Actual Power Availability**" is defined on a per Managed Site basis for each calendar month as the time when electrical power is available at a Managed Site which is adequate to operate all communications equipment installed in accordance with the load recorded in the Acceptance Certificate, as used for the Energy System Design and invoicing ("**Equipment Design Load**") at that Managed Site, expressed as a percentage, and calculated as follows:

Power Availability = X/Y x 100

Where:

X= the total number of hours and minutes (rounded to the nearest minute) in the relevant calendar month (or part thereof) during which electrical power was available at a Managed Site which is adequate to meet the Equipment Design Load at that Managed Site; and

Y= the total number of hours and minutes (rounded to the nearest minute) in such calendar month in which communications equipment was installed and intended to be operational at that Managed Site, excluding any and minutes (rounded to the nearest minute) when electrical power was not available due to a Relief Event as provided in this Agreement.

Point of measurement:

The Actual Power Availability is calculated after the ESP power system DCDU at the termination blocks that interconnect to Customer as detailed in Schedule 2 – Energy System Design.

1.2 Grace Period

1.2.2 Each Managed Site shall be subject to a grace period ("**Grace Period**") of three (3) full calendar months, commencing on the Acceptance Date in respect of that Managed Site and ending on the last day of the third full calendar month following the Acceptance Date in respect of that Managed Site.

Notwithstanding the Grace Period, the Energy Services Partner shall take all reasonable steps to provide the Services in accordance with the minimum performance levels set out in **Table A (Power Availability)** below.

Table A: Power Availability Service Levels

	Sites	**Service Credit/Debit of Monthly Services Fees per Site**
Service Level	>99.99	5%

	>99.90	0
	99.50 - 99.89	-5%
	99.00 - 99.49	-10%
	98.00 - 98.99	-15%
	<98.00	-25%

2. Service Credits: General Conditions

2.1 Escalation of Service Credits / Debits

2.1.2 The value of any Service Credits / Debits shall increase annually in accordance with the escalation of the monthly Services Fees specified in the Agreement.

2.2 Service Credits Cap

2.2.2 The aggregated Service Credits (liquidated damages) payable by the Energy Services Partner to Customer in a specific month shall be capped to fifteen percent (15%) of the total annual Services Fees payable in respect of the entire Managed Sites under the management of the Energy Services Partner for that month.

2.3 Exemptions

2.3.2 The following circumstances and/or Events are excluded from the calculation of the SLAs under this Schedule:

(a) Relief Events, which include any of the following:

(i) Force Majeure Event;

(ii) breach by Customer of its obligations under this Agreement;

(iii) restricted or prevented access to the Managed Site due to community-related issues, a Force Majeure Event or an act or omission occasioned by Customer or its subcontractors.

(b) Scheduled Maintenance;

(i) Site Access restrictions which are outside of the Energy Services Partner's reasonable control;

(ii) Increased load beyond the Equipment Design Load due to increased active equipment being installed on the Managed Site without prior written notice to the Energy Services Partner.

3. Service Credits: Invoicing and Payment

3.1 Service debits or credits will be issued on a monthly basis, following routine performance reviews. These adjustments will reflect the Energy Services Partner's adherence to the agreed service levels and will be calculated based on the performance data gathered during the review period.

Appendix A: SLA Power Availability Template

Customer	
Contract	
Period	
Date Generated	

Number	Site Name	Site Code	Total Time (hr:min:sec)	Total Power Uptime (hr:min:sec)	Total Power Availability (hr:min:sec)	Adjusted Power Availability (hr:min:sec)	Fault Count #
1							
2							
3							
4							
5							
6							
7							
8							
9							
10							
11							
12							
13							
14							
15							
16							
17							
18							
19							
20							
21							
22							
23							
24							
25							
26							
27							
28							
29							
30							
31							
32							
33							
34							
35							
36							
37							

Appendix B: Fault Reporting Template

Customer	
Contract	
Period	
Date Generated	

Fault	Site Name	Site Code	Date (d:m:y)	Start time (hr:min:sec)	Finish time (hr:min:sec)	Duration (hr:min:sec)	Type of Fault	RCA	Comment
1									
2									
3									
4									
5									
6									
7									
8									
9									
10									
11									
12									
13									
14									
15									
16									
17									
18									
19									
20									
21									
22									
23									
24									
25									
26									
27									
28									
29									
30									

SCHEDULE 5
LIST OF COMMITTED SITES

1. **General**

For each Phase of Sites, the Parties will agree on a Site List of Committed Sites. Each of these Sites on the list are considered to be a Committed Site.

Number	Site Name	Owner	Load 5G	Load PoP
1	SLBC 7th Battalion	Private	3	
2	Lumley Jnx	Private	3	
3	Hill Station	Sierratel	3	
4	MMCET	Sierratel	3	
5	Limkokwing University	Private	3	
6	Collegiate Rd	Private	3	
7	No Donkey	Private	3	
8	Leicester Peak	Customer	3	3
9	Kennedy Building	Private	3	
10	Tower Hill	Customer	3	2
11	Murray Town	Private	3	
12	Wilberforce	Private	3	
13	Youyi Building	Customer	3	3
14	Sierra Palms	Private	3	
15	Bintumani	Customer	3	2
16	CLS Tower	Customer	3	
17	CLS Servers	Customer		18
18	Jui Junction	SierraTel	3	
19	Rokupa	SierraTel	3	
20	Upgun	SierraTel	3	
21	Wellington	SierraTel	3	
22	Yams Farm	SierraTel	3	
23	Site 23		3	
24	Site 24		3	
25	Site 25		3	
26	Site 26		3	
27	Site 27		3	
28	Site 28		3	
29	Site 29		3	
30	Site 30		3	
31	Site 31		3	
32	Site 32		3	
33	Site 33		3	
34	Site 34		3	
35	Site 35		3	

36	Site 36		3	
37	Site 37		3	

2. Site Data

Customer will be responsible for making available to the ESP the following documentation for each Committed Site, in advance of a Site Audit or Technical Site Survey on request by the ESP. The ESP shall request the information if and when required by regulatory authorities, investors, or other internal and operational requirements.

Site Documentation
Land Lease Agreement
Land Ownership Deed
Site Location Map
Site Imagery Map
Foundation Layout Design or Floor Plan
Site Set-Back Plan if available
Tower Structural Calculations (Mandatory for Greenfield Site or If available for Brownfield site)
Wind Analysis Report (Mandatory for Greenfield Site or If available for Brownfield site)
Engineering Certifications for Greenfield if available
Fence Layout/Elevation Details
Letter of Undertaking to Remove Mast in Public Interest
Gate House Plan

SCHEDULE 6
SITE ACCESS PROCEDURE

1. **Committed Sites**

1.1 For all Committed Sites, the Customer shall remain responsible for managing all Site Access, including all site access platforms, approvals, rejections, and coordination with other operational teams.

1.2 The ESP shall always make a formal request via the Customer-proposed/existing NOC platform over email, telephone call, or online portal for access to all Committed Sites where a unique site access reference number would be generated for every site access request to each Committed Site.

1.3 The Customer shall approve and manage access to all Committed Sites during survey, and construction phase of the project within 24 hours of a request being received and providing to the ESP a site access reference number from its NOC.

1.4 The ESP shall conform to all Customer Site Access policies and procedures.

1.5 Each Site Access request and reference will be specific to each and every individual that will enter each site.

2. **Managed Sites**

2.1 For each Managed Site, the same site access procedures as set out in section 1 will be followed, with the following exceptions:

The Customer shall approve and manage access to all Committed Sites during survey, and construction phase of the project within 24 hours of a request being received and providing to the ESP a site access reference number from its NOC.

3. **Site Access Requirements**

3.1 Any access to the site without a valid access ref ID is a violation of the Site Access Protocol, and those impacted will be subject to the Customer, Client or Network Partner Consequence Management Policy / Processes

3.2 All site access reference issuance notifications will include reminders to the requestor to have on the correct PPE throughout the site activity, to report all incidents to the NOC, to inform the NOC at the conclusion of the site activity so that the access reference can be closed.

SCHEDULE 7
HEALTH, SAFETY, ENVIRONMENTAL AND LAND ACQUISITION REQUIREMENTS

1. General

1.1. This Schedule defines the Health, Safety, and Environmental (HSE) requirements applicable to the ESP, the Customer and the End User during the provision of the Services.

1.2. The ESP along with its subcontractors, shall make commercially reasonable efforts to prevent bodily injury and property damage during the performance of its Services, provided that such efforts are within its control and responsibility, and do not exceed the scope of work or obligations agreed under the Agreement.

1.3. The Parties will ensure compliance with any and all Applicable Laws, and international standards, including International Finance Corporation Performance Standards (IFC PS) related to health, safety, security, and the environment.

1.4. The Parties shall protect the environment and minimize adverse impacts.

1.5. The Parties shall identify and mitigate health, safety, and environmental risks through appropriate risk management techniques.

1.6. The Parties shall report any accident, theft, or incident within 48 hours. "Accident," "incident," and "theft" are defined as any unplanned event resulting in injury, property damage, environmental harm, or security breach.

1.7. The Parties shall ensure environmentally responsible waste collection, transport, and disposal, maintaining full audit trails.

1.8. The Parties shall collaborate to develop a coordinated strategy for managing shared responsibilities, which will include, but not be limited to, emergency preparedness and response planning, security threat mitigation, spill response, site regulations, visitor management, and traffic control.

1.9. Monthly meetings shall be held between the ESP, Customer and the End User to review updates, ongoing issues, changes, and HSE performance.

2. Responsibilities of the ESP

2.1. Comply with applicable IFC PS, The ESP's HSE policies, and industry practices to protect personnel, assets, and the environment.

2.2. Develop and maintain a comprehensive Environmental, Social, and Governance (ESG) policy that includes specific commitments to HSE standards for project operations.

2.3. Ensure compliance with applicable laws, permits, certifications, and international HSE standards.

2.4. Maintain high standards of safe working practices and provide continuous HSE training to personnel.

2.5. Prevent personnel from working under the influence of alcohol, drugs, or other illegal substances.

2.6. Ensure hazardous materials are properly handled, stored, and disposed of, and provide appropriate personal protective equipment (PPE).

2.7. Assign an HSE representative to coordinate with the Customers' HSE representative.

2.8. Enforce HSE requirements on its subcontractors and assess their HSE performance regularly.

3. Responsibilities of the Customer and End User

3.1. Provide appropriate worker accommodations per IFC and European Bank for Reconstruction and Development (EBRD) guidelines (including toilets for security accommodation, as applicable).

3.2. Implement transparent and fair land acquisition practices in line with IFC PS including IFC PS 5.

3.3. Provide and maintain all required policies, procedures, and authorizations for each site, ensuring that valid permits are available and renewed promptly to comply with all legal requirements.

3.4. Ensure that all permits and licenses are authentic, valid, and kept up to date, indemnifying the ESP against any penalties resulting from expired or invalid documentation.

3.5. Notify the ESP of any significant changes in the company structure or potential reputational risks, in line with ongoing monitoring of Know Your Business Partners (KYBP) checks.

3.6. Ensure appropriate site security measures, including trained security personnel (in line with Voluntary Principles on Security and Human Rights- VSPHR), CCTV systems, etc. Security personnel should receive training on human rights and relevant topics regularly.

3.7. Implement effective and lawful security measures, including human rights considerations.

3.8. Implement a comprehensive security risk assessment system and deliver timely incident reports.

3.9. Designate a security focal point for coordinating with the ESP's representative.

4. Environmental Spillage and Compliance

4.1. The ESP shall assess site conditions and bill the Customer for reconditioning work necessary to achieve HSE compliance. This may include the procurement of fire extinguishers, safety signage, first aid kits, erosion control measures, and other relevant safety interventions.

4.2. The ESP shall implement measures to prevent diesel spillage and other pollution in compliance with environmental standards and the spill prevention and clean-up procedure.

4.3. If spills or contamination occur due to the Customer or End Users' current operations, the Customer shall be responsible for the costs associated with cleaning or rehabilitating the site.

4.4. If spills or contamination occur due to Project activities (e.g. fuelling), the ESP shall undertake clean-up and remediation efforts to minimize environmental impact, in accordance with the spill clean-up procedure.

THE LAND ACQUISITION POLICY

1. **Background**

The ESP recognizes that secure and equitable rights to land and natural resources are essential for sustainable development. The ESP is committed to responsible land acquisition and manages such acquisitions in line with applicable legal frameworks, and the International Finance Corporation Performance Standards (IFC Performance Standard).

2. **Objective**

The purpose of this document is to establish procedures for responsible land acquisition in compliance with IFC Performance Standard, including IFC Performance Standard 5 on Land Acquisition and Involuntary Resettlement. The goal is to ensure that all land acquisition activities are transparent, fair, and, where feasible, avoid or minimize adverse impacts on affected communities.

3. **Scope**

3.1. This policy applies to all land acquisition activities associated with the ESP, whether conducted directly by The ESP or through its Contractors, Clients or Offtakers (the Acquiring Entity). It covers every phase of the land acquisition process, including planning, consultation, compensation, resettlement, and monitoring.

3.2. This policy applies to both physical and economic displacement that may occur, or may have occurred within a timeframe relevant to the project (typically no more than 3 years prior to The ESP's involvement, or where displacement continues to impact the project and its stakeholders) in the following situations:

3.2.1. **Negotiated Settlements:** Land rights acquired through negotiated settlements with property owners or legal rights holders.

3.2.2. **Eviction:** Situations that require the eviction of individuals occupying land without formal, traditional, or recognizable usage rights.

3.2.3. **Expropriation or Compulsory Procedures:** Land rights acquired through expropriation or other compulsory methods (e.g by an Offtaker) in accordance with the host country's legal system.

3.2.4. **Involuntary Restrictions on Land Use:** Situations where restrictions on land use or access to natural resources (marine and aquatic resources, timber, fresh water, medicinal plants, etc.) cause a community or groups to lose access to resources where they have traditional or recognizable usage rights.

4. **Policy**

4.1. The ESP expects the Acquiring Entity to:

4.1.1. Adhere to the responsible governance of land tenure, respect legal and customary land rights of local communities and Indigenous Peoples throughout their business and project activities in line with the IFC standards.

4.1.2. Ensure the Acquiring Entity manages land rights acquisition within its Environmental and Social Management systems and in compliance with relevant international and local requirements.

4.1.3. Ensure all land rights are acquired and managed in line with applicable legislative requirements in the country of operation.

4.1.4. Ensure necessary permits, consents, leases, and licenses are obtained in accordance with regulatory frameworks to ensure that all operations on the land are conducted lawfully.

4.1.5. Refrain from undertaking activities on land that is not fully titled or privately owned. Each land acquisition must be assessed in line with IFC Performance Standards, avoiding or minimize physical or economic displacement, with appropriate risk mitigation measures taken as needed.

5. Land Acquisition Risk Assessment and Requirements

5.1. Prior to securing land rights, the Acquiring Entity must conduct a comprehensive assessment covering social, environmental, technical, and legal risks associated with the land parcels. The assessment must ensure:

5.1.1. The land title was properly acquired, is legal, and valid.

5.1.2. The land is suitable for the intended activities, with clear identification of plantable areas.

5.1.3. The land is free from cultural heritage sites, invasions, illegal occupants, or additional/ competing claims.

5.1.4. No indigenous occupation or traditional /customary rights exist.

5.1.5. The property is not located within a protected or restricted area.

5.1.6. Sensitive environmental areas (e.g., wetlands, riparian zones, gallery forests) are identified for conservation.

5.1.7. Local community cultural heritage sites are acknowledged, with measures to ensure their preservation and access.

5.1.8. Forced eviction and displacement of people (including economic displacement) are avoided.

5.1.9. Land rights are not acquired from individuals or entities with a criminal record or history of misconduct. Background checks will be conducted through publicly available information, including police records, government databases and international sanctions lists.

5.1.10. Easements[1] and passageways, whether legally constituted or not, are to be respected to avoid infringing on local community rights. Access routes may be adjusted, provided they maintain transit for local communities.

5.1.11. Land acquisition must be based on the “willing-buyer, willing-seller” principle, and negotiations must cease immediately if any form of coercion is identified.

5.2. To meet these requirements, the Acquiring Entity will engage with the landowner to obtain all necessary documentation for title analysis and prepare a legal due diligence report, which will incorporate technical, environmental, and social data from the risk assessment.

[1] An easement is a nonpossessory right to use and/or enter onto the real property of another without possessing it. It is "best typified in the right of way which one landowner, A, may enjoy over the land of another, B".

6. Scenarios for Land Acquisition

The ESP may acquire /access land for its projects under various scenarios. This section outlines the procedures and compliance checks required for each. By adhering to these guidelines, The ESP ensures that all land acquisition activities align with IFC standards and respect the rights and interests of affected communities.

6.1. Scenario 1: Land Acquisition by Offtakers

When an Offtaker directly procures the land on which The ESP will build, own and operate a project, the Offtaker will conduct a due diligence assessment to ensure compliance with IFC Performance Standard 5, with The ESP providing oversight. The compliance check will include:

6.1.1. **Land Title and Documentation:** Verification of land titles and documents (e.g. permits, consents, and licenses).

6.1.2. **Dispute and Claim Resolution:** Assurance that there are no unresolved disputes or claims on the land.

6.1.3. **Compensation and Resettlement:** Confirmation that any prior occupants, whether legal or illegal, have been fairly compensated or resettled in accordance with international standards.

6.1.4. **Environmental and Social Compliance:** Compliance with EIA and management plans.

6.1.5. **Alignment with IFC Standards:** Ensuring the Offtakers' Environmental and Social Management System (ESMS) aligns with IFC Performance Standards, particularly regarding issues such as physical and economic displacement, stakeholder engagement, and grievance resolution.

6.2. Scenario 2: Direct Land Procurement by the ESP

When The ESP directly procures land on which it will build, own and operate a project, the following steps will be followed:

6.2.1. **Due Diligence:** Conduct a comprehensive due diligence process to evaluate legal, social, environmental, and technical risks. This includes verifying land titles, identifying potential cultural heritage sites, and evaluating environmental constraints.

6.2.2. **Stakeholder Engagement:** Engage with local communities, landowners, and stakeholders early in the process to ensure transparent communication and address any concerns.

6.2.3. **Land Negotiation and Acquisition:** Adhere to the "willing-buyer, willing-seller" principle, ensuring negotiations are fair, voluntary, and free from coercion.

6.2.4. **Compliance with Legal and IFC Standards:** Ensure all land acquisition processes / activities comply with local laws and IFC Performance Standard 5, including measures to minimize or avoid involuntary resettlement.. In the event of a conflict between guidelines, the more stringent guidelines shall apply.

6.2.5. **Grievance Redress Mechanism:** Establish a grievance redress mechanism to handle any complaints or disputes related to the land acquisition process.

7. Presence of Occupants on the Land

7.1. For sub-scenarios 3 and 4 below, The ESP will ensure due diligence and compliance, but the primary responsibility for executing the Resettlement Action Plan (RAP) and providing compensation remains with the Acquiring Party.

7.2. In addition, where Scenario 1 or 2 above applies, sub-scenarios 3 and 4 may also be relevant:

7.3. Sub-Scenario 3: Presence of Legal Occupants on the Land

If legal[2] occupants are identified on the land:

7.3.1. **Verify Legal Rights:** Confirm the legitimacy of the occupants' land rights, ensuring these are documented and recognized by local authorities.

7.3.2. **Engage with Legal Occupants:** Conduct transparent consultations with the occupants, discussing the project impact, compensation options, and resettlement plans.

7.3.3. **Compensation and Resettlement:** Provide fair market value compensation for land and assets, ensuring that occupants are disadvantaged by the acquisition. Where displacement is unavoidable, develop a RAP that includes:

7.3.3.1. Adequate compensation for lost assets, including land, structures, and livelihoods.

7.3.3.2. Resettlement options that offer equivalent or improved living conditions.

7.3.3.3. Support for restoration of livelihoods and community infrastructure, if necessary.

7.4. **Sub-Scenario 4: Presence of Illegal Occupants on the Land**

If illegal[3] occupants are found on the land:

7.4.1. **Engage and Assess:** Initiate stakeholder engagement processes to address concerns and identify needs, regardless of the legality of the occupants.

7.4.2. **Develop RAP:** Prepare a RAP to ensure the resettlement or compensation process is fair, transparent, and in line with IFC Performance Standard 5. This includes:

7.4.2.1. Identifying all affected persons and assessing their eligibility for compensation or resettlement support.

7.4.2.2. Providing livelihood restoration measures, where applicable.

7.4.3. **Mitigation Measures:** Make every effort to avoid or minimize physical and economic displacement, by exploring all possible alternatives.

---

[2] For legal occupants—those who have recognized legal rights to the land they occupy—IFC PS 5 provides guidance on compensation, livelihood restoration, and resettlement planning. These occupants are entitled to compensation for lost assets at full replacement cost and assistance in relocating and restoring their livelihoods. The standard emphasizes fair and transparent processes to ensure their rights are fully respected.

[3]

Note: For cases where resettlement of occupants is necessary, the ESP has created a RAP guideline available in **Annex A**.

8. **Due Diligence and Grievance Redress**

8.1. Conduct a title study to confirm that the land rights are valid and legally held by the entity in accordance with national laws. This should be complemented by an internal review to ensure compliance with IFC Performance Standard 5.

8.2. All financial agreements between the selling landowner and the acquiring entity must be documented through a Purchase and Sale of Land Agreement. Acquisitions should be formalized through the transfer of title deeds or commercial trust and usufruct contracts, registered as public deeds, where applicable.

8.3. Communities affected or dissatisfied with any aspect of the land acquisition process can submit complaints and concerns through the grievance redress mechanisms[4] established by the Acquiring Entity .

9. **Conditions Where Land Acquisition is Prohibited**

9.1. The Acquiring Entity must not procure land rights for properties that:

9.1.1. Are involved in pending or ongoing succession processes.

9.1.2. Are subject to restrictions identified during consultations with government authorities.

9.1.3. Are associated with potential violations of individual or community rights.

9.1.4. Have experienced involuntary relocation of indigenous communities, even if not officially recognized.

9.1.5. Involve ancestral rights of any indigenous community.

9.2. The ESP will halt project activities if non-compliance with these prohibitions are not adhered to. The Acquiring Entity will be responsible for resolving such issues or identifying alternative properties.

10. **Limitation of Liability for non-Acquiring Activities**

10.1. The ESP shall bear no responsibility or liability for any grievances, loss, relocation issues, or disputes arising from land acquisition processes where The ESP is not the Acquiring Entity. The Acquiring Entity is solely responsible for providing suitable, unencumbered land in compliance with IFC Performance Standard 5 and applicable local laws, including any obligations related to resettlement, compensation, or community engagement. The Acquiring Entity indemnifies The ESP from any risks or liabilities resulting from the Acquiring Entity's actions or omissions related to such activities.

11. **Important Guidelines to Consider**

11.1. Refer to the following guidelines for further details:

For illegal occupants—those without formal, traditional, or recognizable rights to the land they occupy—IFC PS 5 also outlines specific guidelines. While these individuals may not have legal claims to the land, the standard still requires that efforts be made to avoid or minimize displacement. If displacement is unavoidable, illegal occupants must be offered resettlement assistance and support to restore their livelihoods to prevent worsening their economic or social conditions. The aim is to treat all affected persons with dignity and fairness, regardless of their legal status.

11.1.1. Good Practice Handbook: ifc.org/content/dam/ifc/doc/2023/ifc-handbook-for-land-acquisition-and-involuntary-resettlement.pdf

11.1.2. Guidance Note Performance Standard 5 https://www.ifc.org/content/dam/ifc/doc/2010/2012-ifc-ps-guidance-note-5-en.pdf

11.1.3. Performance Standard 5 Land Acquisition and Involuntary Resettlement https://www.ifc.org/content/dam/ifc/doc/2010/2012-ifc-performance-standard-5-en.pdf

11.1.4. Sectoral Guidance. See section on Renewable energy projects https://www.ifc.org/content/dam/ifc/doc/2023/ifc-handbook-for-land-acquisition-and-involuntary-resettlement-module-9.pdf

12. Document Review

12.1. This land acquisition procedure will be reviewed and updated regularly, at least every three years, or as needed to reflect changes in The ESP's projects and practices.

SCHEDULE 8
REQUIREMENTS FOR TECHNICAL SITE SURVEY OF COMMITTED SITES

1. Minimum Acceptability Conditions

1.1. Each Committed Site will be evaluated as part of a Technical Site Survey, to define whether it meets a set of Minimum Acceptability Conditions. These criteria act as the minimum requirements for a site to be determined ready for ESP Energy Equipment implementation, as detailed in Annex A.

1.2. The Minimum Acceptability Conditions will be applicable to each and every Committed Site, unless otherwise agreed by the Parties.

1.3. The Minimum Acceptability Conditions will cover all existing assets on the Committed Site, their operating condition, functionality, and suitability for ESP Energy Equipment installation and Site Acceptance.

1.4. From time to time, the ESP may recommend updates and improvements to the Minimum Acceptability Conditions to reference lessons learned during the implementation phase. Any updates to the Minimum Acceptability Conditions shall not have retroactive effect and shall only apply to Committed Sites which have not yet become Managed Sites.

2. Technical Site Survey

2.1. The ESP shall be responsible for carrying out a detailed Technical Site Survey ("TSS") by inspecting the: physical conditions of the Passive Infrastructure in scope of the agreement as stated in Schedule 1

- 2.1.1. physical conditions of the existing Energy Infrastructure (Generators, Rectifiers, ATS, Batteries, Hybrid Power cabinet, DC distribution box, Transformers, LV Panels, among others) focusing on the process of removing and replacing obsolete equipment;
- 2.1.2. load consumption data of each Committed Site;
- 2.1.3. site space availability;
- 2.1.4. site earthing status;
- 2.1.5. road conditions and network to each Committed Site;
- 2.1.6. obsolete items on each Committed Site;
- 2.1.7. site history, security conditions, risks and incident data;
- 2.1.8. community relations, landlord relations, on-site guarding arrangements; and
- 2.1.9. other conditions as may be defined by the ESP which may affect construction works and ongoing operations.

2.2. Customer shall be responsible for providing the ESP with all As-Built drawings of each Committed Site if available. Any works which have been done by Customer or the previous owner/operator of each Committed Site shall be shared with the ESP. This includes, but is not limited to:

- 2.2.1. cable trenches;
- 2.2.2. concrete works;
- 2.2.3. grounding equipment; and
- 2.2.4. underground works.

2.3. The ESP shall not be responsible for any damage made to an equipment below the ground surface if has not shared its existence and location with the ESP prior to commencement of construction works.

2.4. Customer will be responsible for providing a Prioritization Category of Committed Sites, the definition of each category, and the justification for each Site's categorization as detailed in Schedule 5 Site List

3. TSS Report

3.1. Following the TSS being concluded, the ESP shall deliver to the Customer a TSS report for each Committed Site.

3.2. This TSS report will confirm on whether or not the Committed Site will (i) remain in the Site List for installation, (ii) require reconditioning prior to installation, or (iii) will be rejected.

3.3. The TSS Report will also define:

3.3.1. Design: The proposed ESP Energy System Design for the Committed Site.

3.3.2. Reconditioning Requirements: substantive works required for the site to meet the Minimum Acceptability Conditions.

3.3.3. Snag List: non-substantive works that need completion as part of routine maintenance.

3.3.4. Outstanding maintenance: routine schedules maintenance activities that will be undertaken by Customer before the site becomes a Managed Site.

3.3.5. Construction timeline: The anticipated construction timeline for the works.

3.4. Customer shall validate the TSS report and technical configuration within fourteen (14) days. Without any response from Customer on expiry of such period, the configuration shall be deemed to be considered validated by both parties, subject to the provisions of the Agreement.

3.5. For Committed Sites with validated Technical Configurations, the ESP will be responsible to finalize plans for site installation and proceed deployment of the solution at the site location as described in Schedule 2 (ESP Energy Equipment Design). The ESP reserves the right to change/update the technical configuration during the installation phase.

3.6. The ESP will keep a detailed record of all Passive Infrastructure and any other information as may be noted during the technical site survey.

3.7. ESP shall also maintain and regularly update the list of all Committed Sites that have received a TSS, including their design considerations, configurations, status of acceptance and any Ancillary Service(s) required.

4. Reconditioning Works

4.1. Prior to Site Acceptance (See Schedule 9 Implementation), and the Committed Site becoming a Managed Site, Customer shall be responsible for the cost of any reconditioning of equipment to meet the Minimum Acceptability Conditions as set out in Annex A, either through the ESP, or through existing contractors.

4.2. The ESP will deliver to Customer within the TSS, an outline of required re-conditioning in each Committed Site in order for the Committed Site to meet the Minimum Acceptability Conditions. This includes removal of all obsolete equipment, all maintenance and repairs to access roads, pathways and other civil infrastructure, tower torquing, painting, and any other assets that would fall under the responsibility of the ESP once the Site becomes a Managed Site. The report will include a costed proposal for the reconditioning works, including expected timescales.

4.3. Customer will be responsible for reviewing the reconditioning requirements to meet the Minimum Acceptability Conditions and may elect to conduct its own TSS to validate the ESP quote.

4.4. Customer will review the site reconditioning requirements and quote, and either (i) accept the proposal and instruct the ESP to proceed with reconditioning, or (ii) identify an independent service provider to recondition the Committed Site, or (iii) remove the Committed Site from the site list and propose an alternative site.

4.5. The ESP and Customer will agree reasonable extensions to project delivery timelines for Committed Sites that require reconditioning work. The ESP will not be held responsible for any delays to the planned dates of individual site commissioning as a result of necessary reconditioning work to meet Minimum Acceptability Conditions.

5. Snag List

5.1. The ESP can provide to Customer per Committed Site, a list of all observed snags that require resolution by Customer after the Committed Site becomes a Managed Site. These snags are non-substantive, and non-service affecting works, that require resolution through scheduled or routine maintenance, but do not stop the ESP from proceeding with planning for Implementation.

5.2. Customer will be responsible for fixing these snags within 30 days of notice from the ESP. If Customer does not manage to fix these snags within the required time, the ESP can proceed to fix such snags and issue an invoice to Customer for the works performed, or remove the Committed Site from the site list.

5.3. Customer will be responsible for removing any obsolete equipment located at the site within 15 days of notice from the ESP. If Customer does not remove such obsolete equipment, the ESP shall proceed to remove such equipment and issue an invoice to Customer for such Ancillary Service.

5.4. The ESP will be responsible for validating the completion of snag resolution, and updating the snag list periodically, through its routine and scheduled maintenance activities.

5.5. During installation, the ESP shall additionally share any snags observed on all equipment other than ESP Energy Equipment and add these items to the snag list per Committed Site.

6. Responsibility Matrix

Below gives the responsibility matrix with the following terminology:

R – Responsible

A - Approved/Accountable

C- Consulted

S - Supporting

I - Informed

Item	Description	ESP	Customer
1.	Carry out TSS	R	S
2.	TSS Report (including Site Reconditioning Requirements)	R	I
3.	Site Reconditioning Works Acceptance of quote	R	A
4.	Site Reconditioning Works Charges	S	R
5.	Site Reconditioning Works Execution	C	R
6.	Acceptance of Reconditioning / Final TSS	R	A

Annex A: Minimum Acceptability Conditions

Number	Asset	Requirement
1	Access Gate or Door	Access Gate or Door should be secure, have controlled access and be manned by site security personnel.
2	Pathways	Pathways should be intact and usable
3	Civil construction	Foundations, pathways, access roads, compound wall, crack filling, slabs, tie beam
4	Tower Lightning conductor	Installed and functional
4	Security	Functional Locks, access control process and security management team.
5	Wall/ Retaining wall	Cracks free, steady and firm, visible fault lines, razor wire fully around, and free of rubbish
6	Palisade Fence	Corrosion-free, all sections complete, all bolts present and tight
7	Site cleaning and Janitorial	No disused equipment on site, all vegetation to be cut down, all litter and rubbish to be removed
8	Environment	Site should not be overlooked by buildings, trees, or other high items that obscure light
9	Construction	No construction should be going on at site
	Warranties	Warranties of all equipment should be accessible (If Applicable)
10	Permits	Photograph or soft copy of all relevant permits (i.e. construction, environmental)
11	Active infra	Data on tenants, load requirements, future plans for expansion
12	Passive Other	Functional and in acceptable condition: cable tray and supports, site signage, granite spreading, anti-weed, gates, guard house, ramps,
13	Other	Any other information which may be material to the ESP in the delivery of Services under the Agreement

Annex B: Template of Reconditioning Works

Site Location:

Site Name:

Date of TSS:

Site Specifications:

TSS Manager:

Targeted Date of Installation

Works Required

Number	Asset	Reconditioning Requirement

Duration of works:

Price of Works:

Expected Start date:

Expected Completion date:

Proposed re-survey date:

Expected Installation Date:

Total Cost to Customer:

SCHEDULE 9
IMPLEMENTATION SCOPE

1. Implementation Scope

1.1. Following the completion of the TSS and contract execution, the ESP shall commence the Implementation Scope to achieve Managed Site status, as set out below.

1.2. The Process Map, Figure 1 below shows a high-level process of implementation for each Site.

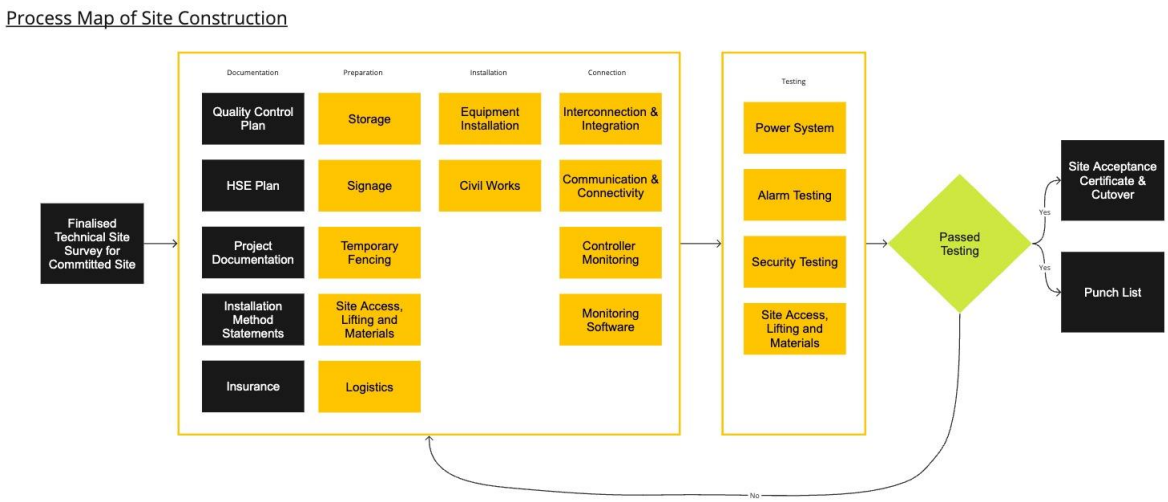

Figure 1. Implementation Process.

1.3. Solution Deployment Approach

The solution for thirty-seven (37) sites would be deployed in two phases (Priority (Phase 1) and Non-priority (Phase 2) sites) as detailed on the table below. This is subject to actual Site readiness.

Description	Phase 1	Phase 2
Priority Sites	Diesel Generator + Rectifier + BESS	Additional BESS + Solar
Non-Priority Sites	Nil	Diesel Generator + Rectifier + BESS + Solar
Total Number of Sites	16+1 (CLS Server)	37

1.4. Construction - Phase 1
The following table details the key steps required for the ESP to execute the Implementation Scope at each Managed Site.

Stage	Description
Site & Materials Verification	Verify that site conditions comply with the *Issued for Construction* design drawings and that PV Racking foundation types are accurate
	Verify that materials on site comply with the *Bill of Quantities*
Site Layout & Sequence	Determine locations for PSC, BESS cabinet(s), DG + Fuel Tank, PV racking substructures, and cabling, and mark all locations with paint; identify any health and safety hazards;
	Determine construction sequence

New Power System Installation	Cast concrete slab for Power System Cabinet (PSC), BESS, or DG + F if necessary
	Remove the palisade fence (if required)
	Reposition PSC, BESS, and DG + Fuel Tank from truck to existing slab or temporary position on site
	Layout and connect all cables for the Power System including PV string home runs and earthing
	Perform quality control review on installed equipment
New Power System Commissioning	Turn on equipment in the prescribed sequence and ensure that each component is performing as required
	Monitor system for 24 hours to confirm performance (or as specified by the manufacturer)
	Cutover from old power system to new power system (If required)
	Label all new equipment, install new signage, record final as-built equipment locations, etc.
	Monitor the new power system
Site Cleaning and Restoration	Remove old or obsolete equipment for relocation to the Customer warehouse - Customer Responsibility
	Repair perimeter fencing (wall or palisade fence) if required - ESP Responsibility
	Site cleanup - ESP Responsibility
	Reposition new power system equipment if required - ESP Responsibility

1.5. Construction - Phase 2

The following table details the key steps required for the ESP to execute the Implementation Scope at each Managed Site.

Stage	Description
Site & Materials Verification	Verify that site conditions comply with the *Issued for Construction* design drawings and that PV Racking foundation types are accurate
	Verify that materials on site comply with the *Bill of Quantities*
Site Layout & Sequence	Determine locations for PSC, BESS cabinet(s), DG + Fuel Tank, PV racking substructures, and cabling, and mark all locations with paint; identify any health and safety hazards;
	Determine construction sequence
PV Racking & PV Modules	For non-concrete footings: Install epoxy anchors, ground screws, staked foundations, and/or ballasted foundations
	For concrete footings: excavate locations, pour concrete, allow concrete to cure 7 days
	Install PV racking structures including posts, rafters, PV rails, knee braces, and wire cross-bracing
	Install PV modules and home run wiring inside conduits
New Power System Installation	Cast concrete slab for Power System Cabinet (PSC), BESS, or DG + F if necessary
	Remove the palisade fence if required
	Reposition PSC, BESS, and DG + Fuel Tank from truck to existing slab or temporary position on site
	Layout and connect all cables for the Power System including PV string home runs and earthing
	Perform quality control review on installed equipment
New Power System Commissioning	Turn on equipment in the prescribed sequence and ensure that each component is performing as required
	Monitor system for 24 hours to confirm performance (or as specified by the manufacturer)

	Cutover from old power system to new power system (If required)
	Label all new equipment, install new signage, record final as-built equipment locations, etc.
	Monitor the new power system
Site Cleaning and Restoration	Remove old or obsolete equipment for relocation to the Customer warehouse - Customer Responsibility
	Repair perimeter fencing (wall or palisade fence) if required - ESP Responsibility
	Site cleanup - ESP Responsibility
	Reposition new power system equipment if required - ESP Responsibility

1.6. The ESP shall be responsible for engineering and design, supply, installation, and commissioning of the ESP Energy Equipment at each Site, up to the cables on the generation side of the interconnection breakers inside the existing DCDB.

1.7. Customer shall be responsible for the engineering and design, supply, installation and commissioning of all other equipment at each site, up to the cables on the load side of the interconnection breakers inside the existing DC distribution unit (See Single Line Diagram in Schedule 2: ESP System and Design).

1.8. The ESP shall notify Customer in writing with justification if during Installation it identifies opportunities or requirements to amend the ESP Energy Equipment design for any of the Sites.

1.9. The ESP shall be responsible for all installation works of the ESP Energy Equipment, including, transport of equipment to site, storage of equipment, civil works, trenches, electrical installation, quality control plan, management of health and safety, supply of all labour, tools and machinery, waste management, signage, cable marking, monitoring, testing and commissioning.

1.10. The primary construction deliverables to be provided by the ESP include:

ID	DESCRIPTION
a)	Quality Management Plan - Implement a standard Quality Assurance / Quality Control plan for construction activities on the Project Site. At least 5 days prior to the planned commencement of construction, have a copy of the Quality Assurance / Quality Control available for review, comment, and approval if requested.
b)	Heath, Safety, and Security - Provide all necessary health and safety requirements including but not limited to the following: • Provide a complete *Health, Safety, and Security Plan*, a copy of which is to be submitted for review and acceptance at least 5 days prior to the planned commencement of construction. • Provide a qualified Health and Safety representative who shall be responsible for all HSE related activities. • Provide a complete Health and Safety file to be stored on site at all times during the construction period. • Provide fall prevention equipment where deemed necessary or required by law
c)	Supply all labour, tools, machinery, and transportation to successfully complete the Works.
d)	Waste Management - Keep the Works clean and orderly throughout the duration of construction. All trash and debris shall be disposed of off-site by licensed waste disposal companies and in accordance with applicable law.
e)	Project documentation - Maintain a copy of all drawings, specifications, and supplier installation manuals on Site at all times during construction. NOTE: A copy of these is to

	be kept on site for reference by maintenance personnel at all times, and may not be removed, modified, or damaged by Customer or any of its agents.
f)	Temporary storage - Make provision for any off-site warehouse space, temporary parking, staging or laydown areas and associated security (as required).
g)	Signage - Provide equipment marking, labelling and signage for the Project. Mandatory warning signs must be placed at key areas near equipment, at Project entrances and where required by law.
h)	Hording/temporary fencing - if there are any environmentally sensitive or unsafe areas on or adjacent to the Site erect a temporary construction fence to protect these areas prior to performing any construction Work.
i)	Tagging - All ESP Energy Equipment, cable terminations, excluding module-to-module and module-to-cable harness connections, shall be labelled.
j)	ESP Energy Equipment installation - set out, assemble, securely mount, fasten, wire and connect the major equipment items and associated balance of system items as per the supplier's specifications and detailed design and engineering drawings
k)	Communications – Install and terminate the communications cables between the Batteries and all other systems the Battery needs to interface with. Install and terminate the communication cables between the generator and all other systems the genset needs to interface with.
l)	Controller and Remote Monitoring Integration – Integrate the power system controller with the Customer RMS/controls system (hardware) – if applicable
m)	Monitoring System Software - Integrate data from the Hybrid power system into the ESP's monitoring portal.
n)	Insurance - Prior to site mobilization provide sufficient evidence that the following insurance cover for the site work is in place as stipulated in the special conditions. • Professional indemnity • 3rd party/Public Liability Construction All Risk (including any transportation of project goods, including Free-Issue Materials, in-country)

1.11. The Customer will be responsible for the connection, integration and testing of ESP Energy Equipment to the Customer's own monitoring platforms, under the supervision of The ESP.

2. Acceptance and Cutover

2.1. Acceptance and Testing Procedures

2.1.1. Power system, alarms, and monitoring

Once construction is complete, the ESP will notify the Customer of site completion after complete system integration, commissioning and Testing. Customer will notify the ESP of the

timeline for tentative tenant live date. Between Site Completion and Site Acceptance, ESP shall be responsible for performing all pre-commissioning inspections, monitoring systems and alarm tests, to ensure their proper function. Customer will support all commissioning tests through their NOC and associated field and quality teams.

The ESP shall share a commissioning and testing checklist and test results with Customer to prepare for Tenant live date. The commissioning and testing checklist will be documented and agreed in advance with Customer, and will be applicable to every site, unless otherwise agreed by the Parties.

2.2. Site Acceptance Certificate

2.2.1. After completing the installation, the ESP will apply to Customer for a Site Acceptance Certificate in accordance with the Agreement Clause 5.2 (see Annex A).

2.2.2. The ESP and Customer shall fix an agreed date within 7 days of site installation completion for Site load cut-over and Site Acceptance, where both parties' representatives (including but not limited to Customer Field Service Engineer, Customer contracted MSP, the ESP representative, the ESP contracted MSP and/or security contractor) jointly visit the Site.

2.2.3. Customer shall issue a Site Acceptance Certificate in accordance with the Agreement, which will define the final solution installed at the site used for invoicing after commissioning. In case of any modification to the technical configuration, the ESP shall send a notification to Customer informing of the change, and a note explaining the reasons for this change.

2.2.4. The ESP shall formally share a handover note/checklist of all assets present on Site and their conditions within 7 days of Site Acceptance.

2.2.5. The ESP shall organize meetings with Customer RMS and NOC team for site RMS integration planning and schedule management prior to Site Acceptance.

2.2.6. Customer shall make available its site quality auditor to all completed sites within 3 days of notification for Installation commissioning and/or snag clearance.

2.2.7. Customer shall also, within 3 days after formal notification of Site Acceptance and commissioning, deploy its engineers/subcontractors to validate and integrate its RMS to all completed site installations.

2.2.8. The overall process and indicative timeline are as follows:

Milestone	**Indicative Deadlines (Weeks)**
Agreement Signed	W0
Sixteen (16+1) Priority Sites Delivered	W7
Joint Customer & the ESP Site Acceptance, cutover and commissioning	W9
Thirty-Seven (37) Priority + Non-priority Sites Delivered	W22
Joint Customer & the ESP Site Acceptance, cutover and commissioning	W24
Punch List completion	W26
Final Acceptance	W30

2.3. Security

The Customer shall provide security during installations up to Site Acceptance and the Site becomes a Managed Site. The Customer shall also be responsible for site security management and physical access control upon the complete site solution by the ESP. ESP will ensure strict adherence to Customer-defined access procedure.

2.4. NOC registration

2.4.1. The ESP shall submit its MSP escalation matrix for all allocated Sites within 14 days before site construction completion to the Customer for validation.

2.4.2. The ESP shall also make a formal request to the Customer within 3 days of every site installation completion to update its database for all allocated and/or completed sites for registration, approval, and NOC platform activation of the ESP contracted MSP providers.

2.4.3. Customer shall make provisional space for at least one personnel for each of the ESP contracted MSP providers at the Customer NOC.

2.5. Site Cutover/Handover

2.5.1. Punchlist

At the point of Site Acceptance, Customer shall share any snags observed on the installation of the power system which may not adequately match the Standards agreed between the parties. Where irregularities are identified by Customer that are subject to impact network performance, or site operational performance, the ESP shall be responsible to remedy, rectify and close out any snag within 14 days of receipt of notification by Customer, unless identified as non-routine maintenance.

Annex A: Site Acceptance Checklist Template

Site Acceptance Checklist

SITE ID:	**Name**	**Location**	**Site Load:**
Li ion batteries Capacity:	Li ion batteries Quantity:	Li ion Batteries Voltage:	
DG Capacity:	Phases:	Fuel Tank	
Rectifier Capacity:	Number of available modules:	No of active Modules:	
Solar Capacity:	Solar Array Voltage:	No of Panels:	Solar Brand:

Item		**Yes**	**No**	**Not Applicable**
Check tenant DCDB is provided including CB	CB capacity and quantities:			
Check main DC DU is provided including CB				
Check cables sizing conforms with best practices				
Check cable for ACDG to power system	Sizing:			
Check PV cable from solar to combiner box	Sizing			
Check cable for power system, and solar system	Sizing:			
Check battery cable to power system	Sizing			
Check cable from power system main DCDB toTenant DCDB	Sizing:			
Check the cable interconnection between the modules are well fastened to the structure using suitable clips or cable ties				
Check that all surface cabling is of armoured type and if not armoured should be placed in electrical conduits				
All Cables are well lugged with no slacks				
Signal Cables are well labelled with numbers or color codes				
Cables for Positive & Negative are of different colors (Positive -Red & Negative -Black)				
Solar panel anti-theft system				
Solar panels is free of damage				
Check the solar structure is aligned and levelled				
Check the bolting has been done at every hole				
Check if the foundations are of sufficient size				
Check provision of MC4 Connector				
Battey installed according to the design & best practice				
Battery installed is free of damage.				
Battery Cabinet is IP65 and free cooling				
Battery & Cabinet installed and Earthed				
Battery Cabinet is with key/locks				
ACDG without damage and installed on Plinth				
ACDG Generator is earthed				
Rectifier System is earthed				
Rectifier System cabinet is IP 65 and free cooling				
Spillage or environmental risks visible				
Site is secure with secure perimeter and lockable access				
Security measures are in place				
Energy meters				
Remote monitoring System				

Additional Comments		
Proceed with cut-over and commissioning	**Yes :**	**No:**

Vendor Deployment	**ZoodlabsAuditor**	**CBE Representative**
Name:	Name:	Name:
Sign:	Sign:	Sign:
Date:	Date:	Date:

Annex B: Site Acceptance Certificate Template

1. Site Details

Customer	
Site Name	
Site Location	
Date of Acceptance	
Time of Acceptance	
Zoodlabs Representative	
CBE Representative	

3. Load Details

System installed	
Planned Load	
PV Modules active	
DG size	
CBE Notes	
Z5G Notes	

This document certifies that the site has passed Customer Site Acceptance and Energy Services have started to be provided. The Information contained above will be used for billing.

Signed CBE Representative	Name:	Date:	Signature:

Signed Z5G Representative	Name:	Date:	Signature:

SCHEDULE 10
SCHEDULED PHASE COMPLETION DATE AND DELAY DAMAGES

1. **Project Schedule and Target Dates for Phases**

Phase	Description	Target Site List Date	Target Phase Completion Date	Scheduled Phase Completion Date
Phase 1	Installation and commissioning of the ESP Energy Equipment or upgrades on 16 priority sites in Freetown	10th October 2024	10th November 2024	30th November 2024
Phase 2	Installation, commissioning or upgrade of the ESP Energy Equipment on the remaining 21 sites	31st December 2024	21st February 2025	28th February 2025

1.1. **Target Site List Date:** The date by which the Customer is to provide the final list of sites for the Energy Services Partner to install the ESP Energy Equipment for each Phase. Each Site must have all required permits, approvals, and regulatory compliance in place. Upon receipt of the final list, the Energy Services Partner will proceed with the Site-specific design and solution implementation.

1.2. **Target Phase Completion Date:** The date by which the Energy Services Partner must complete the installation of the ESP Energy Equipment at each Site within the Phase, ensuring the systems are ready for acceptance testing and snagging.

2. **Delay Liquidated Damages**

2.1. **Per Site Completion Date**

2.1.1. Damages

Subject to the provisions of Clause 5.3 of the Agreement, a daily penalty of seven dollars (USD7) per Site will be charged by the Customer to the Energy Services Partner for each day of delay beyond the agreed Scheduled Phase Completion Date for each specific Site. The penalty will be calculated independently for each Site. Delays at one Site will not impact the damages applied to other Sites.

2.1.2. Payment Terms

Accrued Phase Delay Damages shall attract debit notes from the Customer which shall be set off from the Energy Lease Fees within three (3) months of the Site being commissioned.

2.1.3. Phase Delay Damages Cap

The maximum delay damage applied to such Phase Delay Damages shall be equal to one month of Energy Lease Fees for that Site.

2.2. **Target Site List Date**

2.2.1. Damages

A daily penalty of seven dollars (USD7) per Site will be charged by the Energy Services Partner to the Customer for each day of delay beyond the Target Site List Date for each phase, and the Scheduled Phase Completion Date shall be extended on a day-for-day basis for any such delay. The penalty will be calculated independently for each Site. Delays at one site will not impact the damages applied to other Sites.

2.2.2. Payment Terms

Any delay damages that apply will be issued as service debits from Energy Lease Fees within 3 months of the Site being commissioned.

2.2.3. Maximum Damages

The maximum damages shall be a maximum of **six (6) months** from the Target Site List Date. After this period, the Energy Lease Fee will commence regardless of the completion status, and no further damages will be applied.

2.3. Exemptions from Phase Delay Damages

2.3.1. Force Majeure

Delays caused by Force Majeure Events will be exempt from damages.

2.3.2. Customer / End User Delays

Any delays attributable to decisions or actions by the Customer and/or the End User including changes in project scope, and delayed approvals will not incur damages.

2.3.3. Regulatory Delays

Delays resulting from obtaining regulatory approvals or compliance requirements will also be exempt from damages.

SCHEDULE 11
LIST OF APPROVED SUBCONTRACTORS

The ESP may subcontract the following suppliers as required to deliver the Services and, in all instances, ensure such full compliance with Applicable Laws:

1. 3-Etap Energy Construction Industry and Trade Company Limited
2. AGL
3. Ampak Nigeria Limited
4. Aptech Africa Limited
5. Axe Struct (Pty) Ltd
6. Circadian Technologies
7. Easy Solar (SL) Limited
8. Enetek Power Group
9. Guangdong Aiko Solar Energy Technology Co., Ltd.
10. MAG Engineering
11. Mantrac Nigeria Limited
12. Polarium Energy Solutions
13. Powerx Technology Limited
14. STC Cargo GmbH9 (Logistics)
15. Western Cape Rubicon Electrical (Pty) Ltd

SCHEDULE 12
APPROVALS

The following approvals are required to be granted by the following parties:

Validation Requirement	**Responsible Party**	**Issuing Authority**
EIA License	Customer	Environmental Protection Agency (EPA)
Building Permit	Customer	Ministry of Lands, Municipal and Local Authorities / and Local Government
Environmental Protection Agency (EPA) Approvals	Customer	Environmental Protection Agency (EPA)
Captive Power Generation License	Customer	Electricity and Water Regulatory Commission (EWRC)
Sierra Leone Roads Authority (SLRA) Approval (if installation affects public roads)	Customer	Sierra Leone Roads Authority (SLRA)
Municipal / Local Government Authority Approval	Customer	Relevant Local Government / Municipality
Aviation Safety Approval (if solar infrastructure is tall and impacts aviation)	Customer	Sierra Leone Civil Aviation Authority (SLCAA)
Fire Safety Certification	Customer	Sierra Leone Fire Force
Health and Safety Certification	Customer	Ministry of Labour and Social Security
Tax Clearance / Investment Incentives	Customer	National Revenue Authority (NRA)
Landowner Consent and Lease Agreements	Customer	Office of the Administrator and Registrar General
Structural Safety Certification	ESP	Accredited Structural Engineer
Fuel Storage and Safety	Customer	Petroleum Regulatory Agency, EWRC

SCHEDULE 13
EXIT AMOUNT

The Exit Amount payable upon the due termination of this Agreement in accordance with Clause 33 will be an amount in USD, determined as per this Schedule. Customer will settle the Exit Amount invoice in USD.

Table 1 of this Schedule sets out the methodology applicable to determining the Exit Amount in respect of each type of termination.

Definitions

In this Schedule:

(a) "**Base IRR**" means the internal rate of return derived from projected contract cash flows for the Services and Fees charged under this Agreement based on a 10-year Term and assuming complete and on-time payment of the Fees by Customer.

(b) "**Breakage Costs**" means any costs incurred by the Energy Services Partner as a result of the termination of this Agreement including but not limited to costs related to dismantling, removal, and transportation of equipment, demobilization of personnel, cancellation fees, and any other direct or indirect expenses arising from the early termination.

(c) "**Remedial Costs**" means total cost of remedial work evaluated under Clause 33.45 of the Agreement.

(d) "**Equity**" means: (i) the issued and paid-up share capital in the Energy Services Partner (Share Equity); and (ii) all amounts advanced by the Shareholders under any Shareholder Loan.

(e) "**Insurance Proceeds**" means a deduction of (to the extent it is a positive amount), the aggregate, as at the date of termination, of the value of any right of the Energy Services Partner or the Energy Services Partner's Shareholders to receive any insurance proceeds.

(f) "**Make-Whole Payment**" means, in the context of a Customer Event of Default but in no other scenario, the USD payment required to achieve, not considering remuneration for any Agreement Breakage Costs, the same nominal internal rate of return on Equity to the Shareholders, in USD, as is forecast to be achieved if the Agreement were to have continued for the full Term, with full and complete payment performance by Customer. The calculation of the Make-Whole Payment shall consider Customer contract performance, meaning the complete and on-time payment of Fees, only for each completed contract year, and shall not provide pro-rata credit for Fees paid in the year of termination up until the date of Termination. For the avoidance of doubt, this provision treats an Event of Default happening at any time prior to the final day of the contract year as having occurred on the first day of the contract year. The Make-Whole Payment shall, per Table 1 'Type A' below, assume and include 100% payment of Net Capital Outstanding and inherently includes a Purchase Obligation.

(g) **Net Capital Outstanding**" means in USD:

(i) All costs and expenses incurred by the Energy Services Partner in furtherance of development and delivery of the Project to the Commercial Operations Date of the sites as defined in Schedule 5 – Site List, excluding any internal resourcing costs such as the direct project team costs of the Energy Services Partner; and

(ii) Any additional capital expenditure made by the Energy Services Partner beyond that required to effect the provision of the Services, at the request of the Customer after the Commercial Operations Date; less

(iii) Accumulated depreciation, on a straight-line basis, of each of the amounts at a. over the Term, noting that each completed site or set of sites shall commence its depreciation period upon its own Commercial Operations Date, and not, with the exception of the final site or set of sites, on the Commercial Operations Date of the

final site or set of sites as set forth in a. above; for each of the amounts at b., the depreciation period shall commence concurrent with the date of completed installation into a site or sites and depreciation shall be calculated on a straight-line basis as if the 10-year Term were restarted.

A. Depreciation schedules shall be applied to the book value of amounts at a. and b. in USD terms, without consideration for USD-SLL exchange rates, SLL-denominated tax depreciation calculations, or other SLL-denominated conventions or provisions as may be required of the Energy Services Partner.

B. Customer shall be entitled to request to inspect and audit these figures.

(h) "**Purchase Obligation**" means the obligation on the Customer to purchase the ESP Energy Equipment.

(i) "**Shareholders**" means the holders of the Share Equity in the Energy Services Partner.

(j) "**Shareholder Loan**" means the debt obligations of the Energy Services Partner to a Shareholder arising under a Shareholder Loan Agreement.

(k) "**Shareholder Loan Agreement"** means a loan agreement, loan notes instrument or other document entered, issued or to be entered into or issued between the Energy Services Partner (as borrower) and the Shareholder(s) (as lender).

TABLE 1: SUMMARY OF TERMINATION TRIGGERS AND METHODOLOGY FOR CALCULATING EACH EXIT AMOUNT

			Calculating the Exit Amount			**Deductions applicable at the time of payment**	
Type	**Trigger for Termination**	**Purchase of ESP Energy Equipment**	**Net Capital Outstanding**	**Agreement Breakage Costs**	**Equity Return**	**Insurance Proceeds**	**Remedial Costs**
A	Customer Default	Purchase Obligation	N/A (included in Make-Whole Payment)	100%	Make-Whole Paymen t	N/A	N/A
B	Energy Services Partner Default	Purchase Optional	80%	0%	N/A	Deduct pro rata	Deduct pro rata
C	Force Majeure / Change in Law	Purchase Obligation	100%	50%	N/A	Deduct pro rata	Deduct from total

DESCRIPTION OF EXIT AMOUNT CALCULATIONS
A: EXIT AMOUNT A: CUSTOMER Event Of Default
Exit Amount A shall cover: (a) Full payment of Agreement Breakage Costs; and (b) Payment of the Make-Whole Payment
B: EXIT AMOUNT B: Energy Services Partner Event of Default
Exit Amount B shall cover: (a) Payment of 80% of Net Capital Outstanding; and **Deductions**: At payment, Energy Services Partner shall deduct any Insurance Proceeds and any Remedial Costs from Exit Amount B on a pro-rata basis.
C: EXIT AMOUNT C: Force Majeure or Change In Law
Exit Amount C shall cover: (a) Settlement of 100% of the Net Capital Outstanding; (b) Payment of 50% of the Agreement Breakage Costs **Deductions:** At payment, Energy Services Partner shall deduct from Exit Amount C any Insurance Proceeds on a pro-rata basis and any Remedial Costs from the total Exit Amount.

Calculation of Make-Whole Payment
Make-Whole Payment Calculation: 1. The Make-Whole Payment is calculated to determine the appropriate remuneration amount required by the Energy Services Partner to effect its Base IRR. It is assumed to include 100% remuneration for all Net Capital Outstanding, plus a residual amount to effect Base IRR. 2. While credit shall be given for cumulative Fees received in full and on time in previous, completed contract years, meaning these amounts are not included in the Make-Whole Payment calculation, this calculation treats an Event of Default happening at any time prior to the final day of the contract Year in which it occurs as having occurred on the first day of the contract year. Credit is not given in the calculation for Fees paid prior to the Event of Default. 3. The Make-Whole Payment is therefore calculated as total foregone Fees for all future contract years *and* total Fees for the contract year in which the Event of Default occurs, adjusted per the standard conventions of financial mathematics to effect the Base IRR in the year of Termination.